AN ISO 9001:2008 CERTIFIED COMPANY

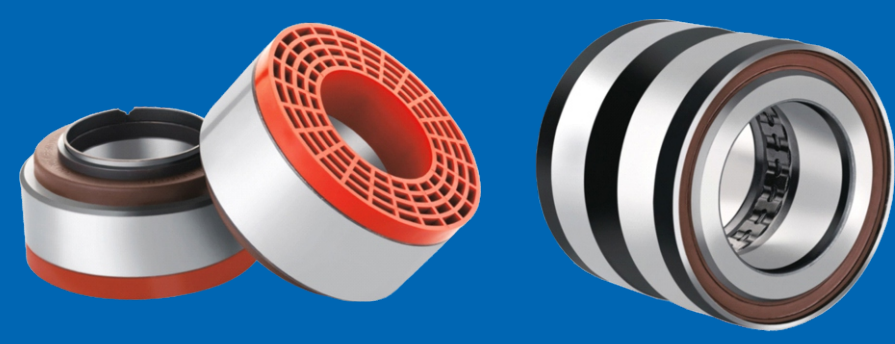

Energy Efficient Bearings

BHP™

BEARINGS

SPECIALIZE IN AUTOMOTIVE BEARING

BHP™

BEARINGS

An ISO 9001:2008 Certified Company

ABOUT US

Turnotech Auto Engineering Pvt Ltd. An ISO 9001:20008 Certified company is a leading Bearing Manufacturer, exporter and OEM Supplier in India. With a world class ultra modern bearing manufacturing unit, we supply high quality products ensuring the best of design, uniformity and robust performance for our esteemed clients. The product that we manufacture are appreciated worldwide for their efficient design, consistency and competitive price. We have a dedicated R & D laboratory which ensures continuous product improvement, new product development and administers stringent quality checks.

We have a strong pan India presence through our network which ensure that our products can reach out the customer in remote locations. We also export our bearings to a large number of countries in the Middle East, East Africa, We work with large conglomerates and corporate entities in the industries space. We are proud to be recognized in the industry as a reputed manufacturer of bearings

We also specialize in developing custom bearings for our clients when they are required in bulk quantities.

TÜV SÜD ISO 9001

An ISO 9001:2008
Certified Company

Info@turnotechauto.in

www.turnotechauto.in

BHP™

BEARINGS

An ISO 9001:2008 Certified Company

PRODUCTION

Turnotech Auto Engineering Pvt. Ltd has an extravagant manufacturing facility spread in the whooping area. This state of the art facility includes a dedicated R&D plant to propel our vision for innovation. We are also having in house manufacturing facility of parts using machineries like CNC, VMC, HMC, and having all latest instruments To ensure high quality of products we have developed an in house heat treatment facility.

The implementation of quality policy is a demonstration of our overriding commitment to customer satisfaction.

We have totally in house production facilities to ensuring the quality of our product ,

- Forging
- Spherodised Annealing
- CNC Turning
- Heat Treatment (Through Hardening)
- Grinding - SPM for Bearing Rings
  - Duplex Grinders (Through Feed)
  - Center Less Grinders
  - Enternal Track Grinders
  - Lip Grinders
  - Internal Grinders
  - Super Finishing
  - A Complete line of imported, automized, CNC controlled grinding machine with MARPOSS in process & post process gauging.
- Imported Automatic Washing & Oiling Machine for Assembly Line.
- Automatic Roller Shorting Machine.

Info@turnotechauto.in

www.turnotechauto.in

BHP™

BEARINGS

An ISO 9001:2008 Certified Company

QUALITY POLICY

We at "Turnotech Auto Engineering Pvt. Ltd." Will strive to deliver Bearing product to meet and exceed customer expectations of quality, delivery and cost. We will continuously improve our systems and process.

This policy shall be deployed through.

- Continual improvement in product quality by customer feedback, process control and variability reduction.
- Up gradation of manufacturing technology and skills·
- Continuously improvement in product performance
- Maintaining a clear and safe work environment and involving every individual in creation of a good learning and open work culture
- To maintain quality as per ISO standard.
- Manufacture products which meet customer requirements.
- On-time delivery System.
- Monitor customer satisfaction.
- Establish Cost Reduction Programs.
- Striving for Quality Excellence.

Info@turnotechauto.in

www.turnotechauto.in

BHP™
BEARINGS

An ISO 9001:2008 Certified Company

QUALITY POLICY

WE STRICKLY OBSERVE QUALITY STANDARDS RIGHT FROM RAW MATERIAL SOURCING UNTIL THE STAGE WHEN PRODUCT ARE FINALLY DELVIERED TO CLIENTS. WE OBSERVE OUR ENTIRE PRODCUTION PROCESS ON THE BESIS OF FOLLOWING PARAMETERES.

MODEL

R & D (RESEARCH & DEVLOPMENT)

PRODUCT DESIGN

STRENTH & STABILITY

OPERATIONAL STANDARDS

QUALITY STANDARDS

PRODUCT FINISHING

MAINTENANCE COST

QUALITY OF SERVICE LIFE

WHY US?

WE HAVE SERVICED TOP CLIENTS AND MARKET LEADERS WHO HAVE ACHIEVED SIGNIFICANT BENEFITS THROUGH OUR PRODUCTS. TODAY WE ATTRIBUTE OUR COMMENDABLE MARKET POSITION TO THE FOLLOWING FACTORS:

- Developing implements as per the customers need
- Strong market network
- Team of expert & dedicated professionals
- Assured quality at affordable price
- Quick dispatch of order as per the given commitment
- Uses of good quality raw-materials
- Valuable market experience

Info@turnotechauto.in

www.turnotechauto.in

BHP™

BEARINGS

An ISO 9001:2008 Certified Company

Bearings for Application

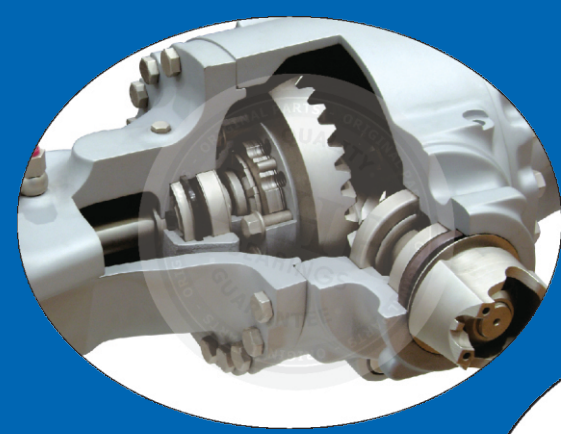

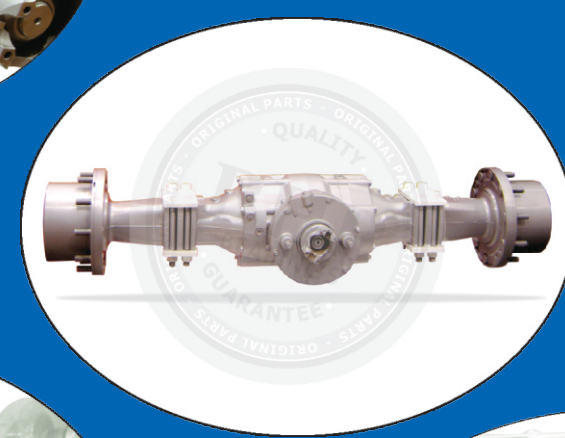

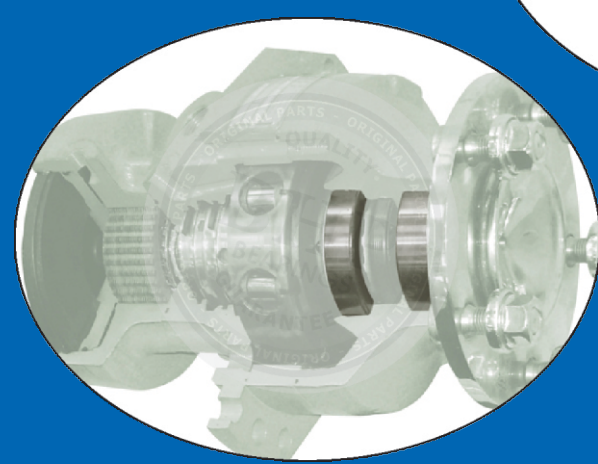

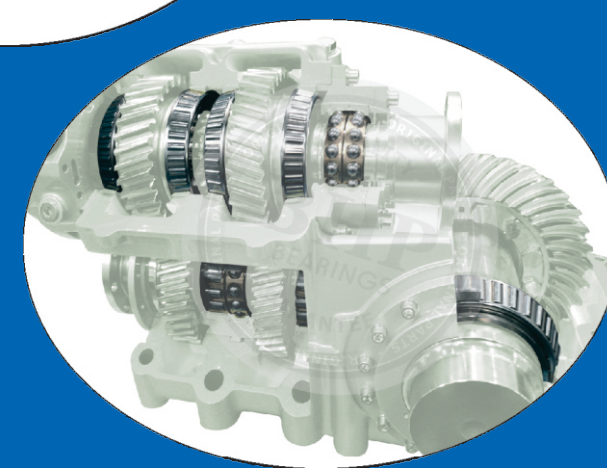

Info@turnotechauto.in

www.turnotechauto.in

BHP™

BEARINGS

An ISO 9001:2008 Certified Company

Info@turnotechauto.in

www.turnotechauto.in

BHP™

BEARINGS

An ISO 9001:2008 Certified Company

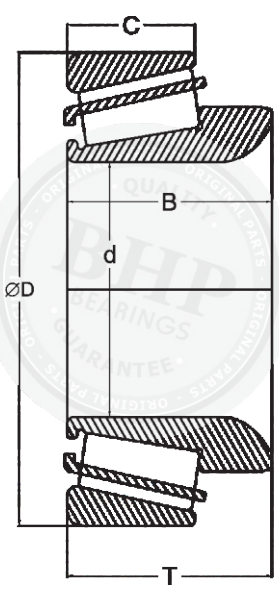

BHP PART NUMBER	REFERENCE PART NUMBER	BEARING SERIES	DIMENSION (in mm)					WEIGHT (Kgs.)
			d	D	T	C	B	
BHP 0001	SKF VKHB 2053	HM 220149 HM 220110	99.975	156.975	42	34	42	2.793

BRAND	OEM PART NUMBER
SCANIA	1342706 / 354076
VOLVO	183326

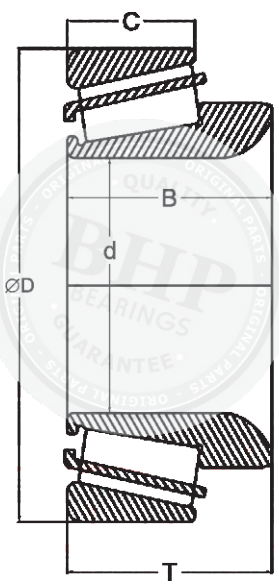

BHP PART NUMBER	REFERENCE PART NUMBER	BEARING SERIES	DIMENSION (in mm)					WEIGHT (Kgs.)
			d	D	T	C	B	
BHP 0002	SKF VKHB 2132/ 331933	528983B	70	130	57	35	56	2.75

BRAND	OEM PART NUMBER
DAF	260204
MAN	06 32449 3343 / 06 32499 0081 / 81 93420 0074
MERCEDES BANZ	004 981 3905

BHP™
BEARINGS

An ISO 9001:2008 Certified Company

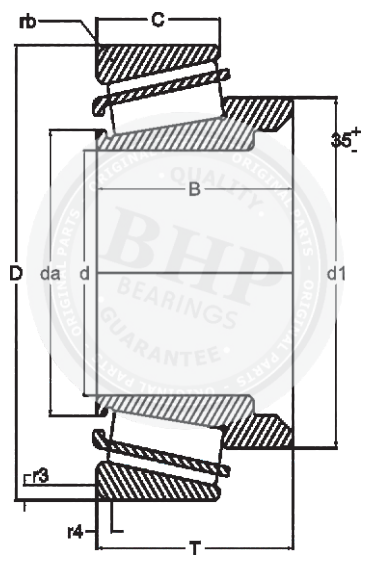

BHP PART NUMBER	REFERENCE PART NUMBER	BEARING SERIES	DIMENSION (in mm)					WEIGHT (Kgs.)
			d	D	T	C	B	
BHP 0003	SKF VKHB 2071	534565	70	130	57	35	56	2.73

BRAND	OEM PART NUMBER
KASSBOHRER	6 691 383 000 / 6 691 383 000E
MERCEDES BENZ	005 981 3005 / 005 981 3105

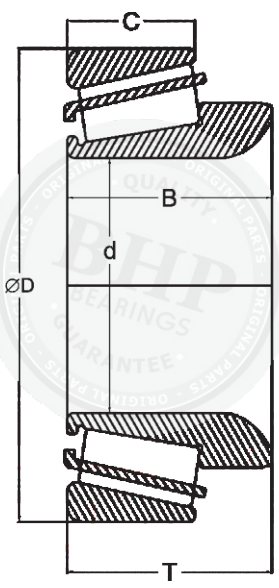

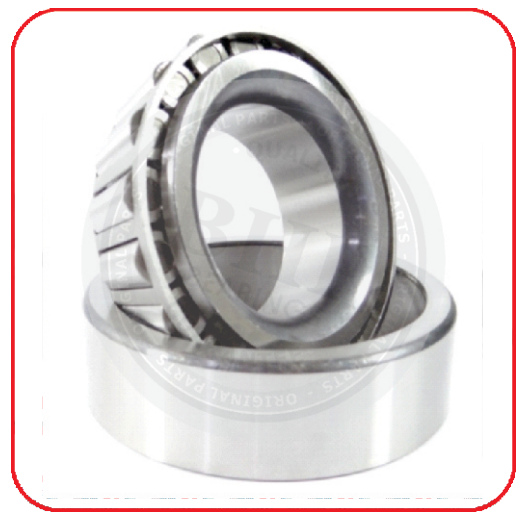

BHP PART NUMBER	REFERENCE PART NUMBER	BEARING SERIES	DIMENSION (in mm)					WEIGHT (Kgs.)
			d	D	T	C	B	
BHP 0004	SKF VKHB 2024	538971	70	130	43	35	42	2.33

BRAND	OEM PART NUMBER
SCANIA	322748
VOLVO	1584340
VOLVO	8151816

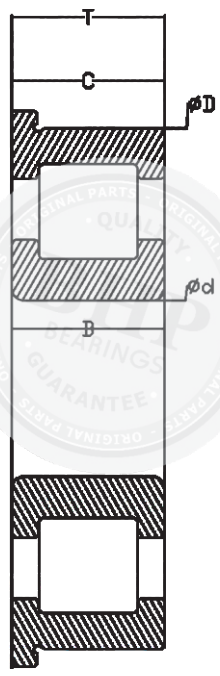

BHP PART NUMBER	REFERENCE PART NUMBER	BEARING SERIES	DIMENSION (in mm)					WEIGHT (Kgs.)
			d	D	T	C	B	
BHP 0005	SKF 635245	540106	60	130	31	31	25.5	2.16

BRAND	OEM PART NUMBER
MAN	322748
MERCEDES BENZ	001 980 7902 / 001 980 9002
MERCEDES BENZ	002 980 1002

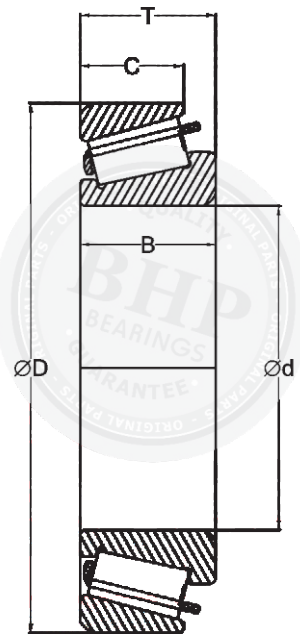

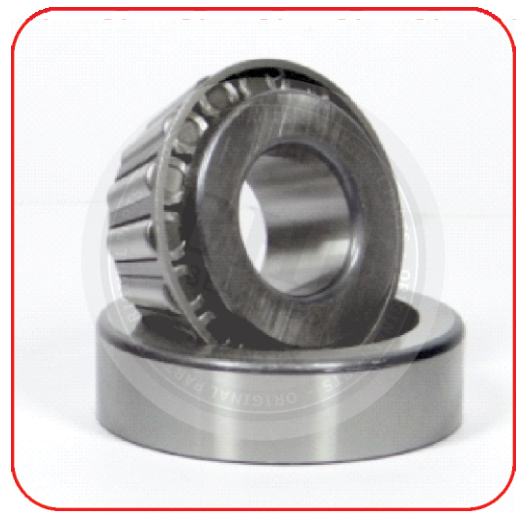

BHP PART NUMBER	REFERENCE PART NUMBER	BEARING SERIES	DIMENSION (in mm)					WEIGHT (Kgs.)
			d	D	T	C	B	
BHP 0006	-	543805	38.10	90	35.25	26.4	33	1.10

BRAND	OEM PART NUMBER
VOLVO	1588222

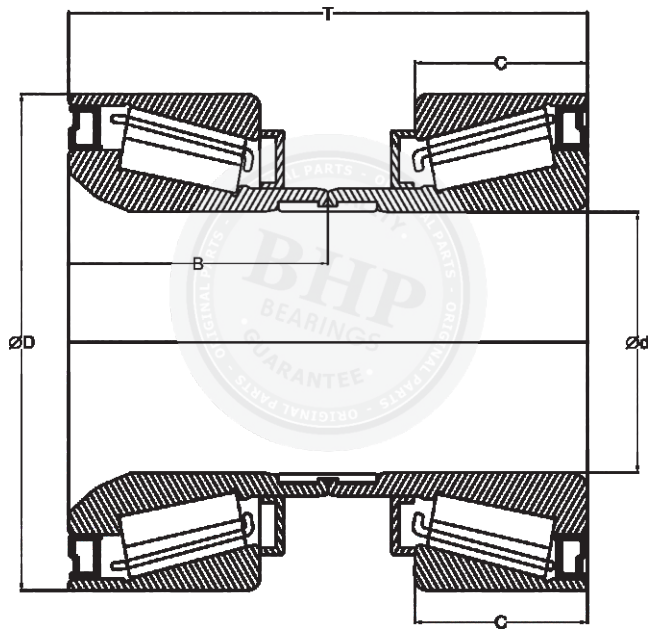

BHP PART NUMBER	REFERENCE PART NUMBER	BEARING SERIES	DIMENSION (in mm)					WEIGHT (Kgs.)
			d	D	T	C	B	
BHP 0007	FERSA-F 200016	566074.H195	69.8	125	114	47.15 40.40	57	4.86

BRAND	OEM PART NUMBER
DAF	15015292

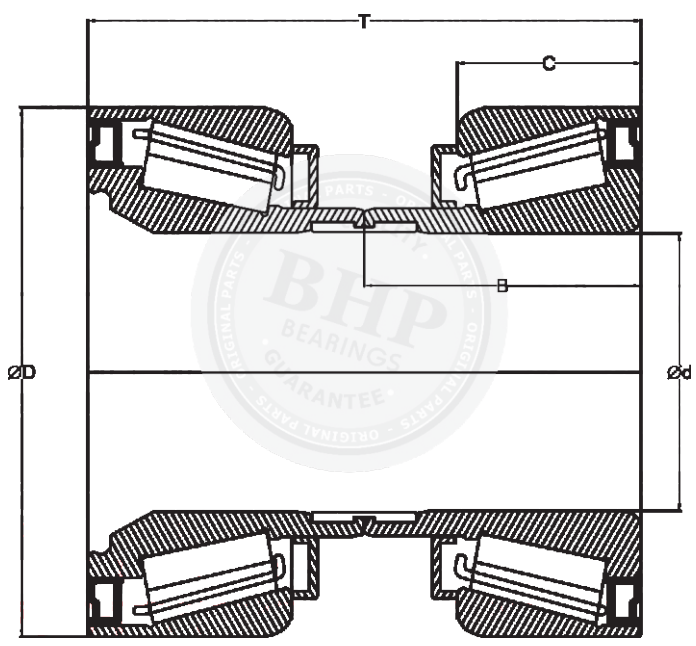

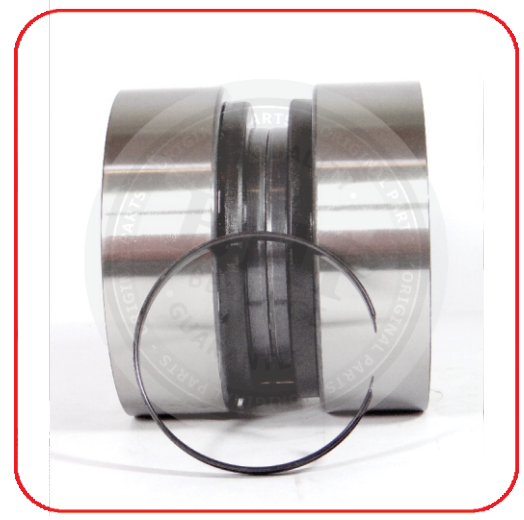

BHP PART NUMBER	REFERENCE PART NUMBER	BEARING SERIES	DIMENSION (in mm)					WEIGHT (Kgs.)
			d	D	T	C	B	
BHP 0008	FERSA - F20017	566283.H195	99.80	148	135	47	67.5	6.00

BRAND	OEM PART NUMBER
DAF	1801594

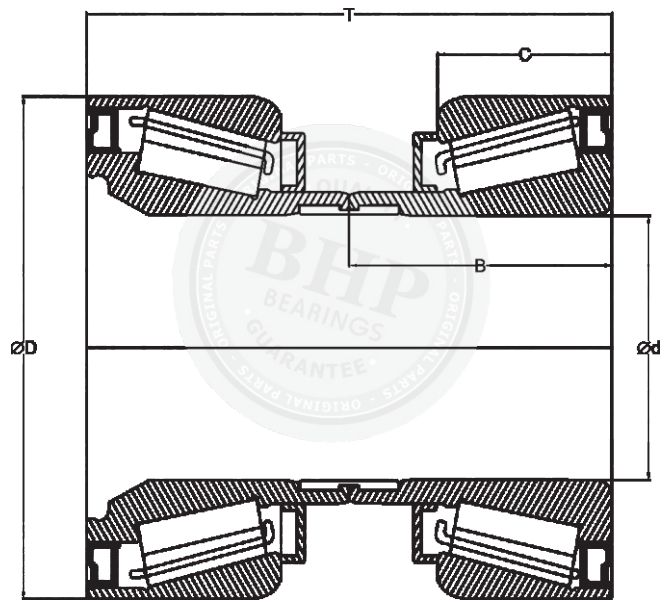

BHP PART NUMBER	REFERENCE PART NUMBER	BEARING SERIES	DIMENSION (in mm)					WEIGHT (Kgs.)
			d	D	T	C	B	
BHP 0009	SKF VKBA 5423	566425.H195	99.80	148	135	42.5	67.5	6.00

BRAND	OEM PART NUMBER
RENAULT TRUCKS	5001861915
RENAULT TRUCKS	7420516957
RENAULT TRUCKS	7420518661
RENAULT TRUCKS	7420535262

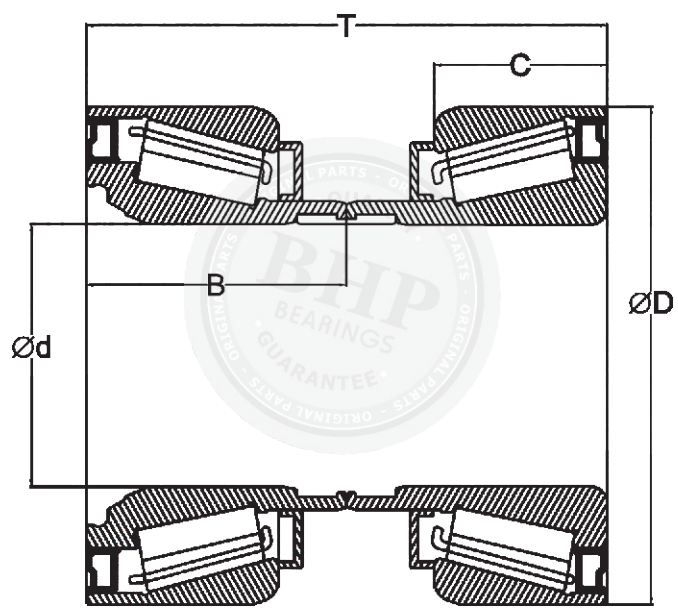

BHP PART NUMBER	REFERENCE PART NUMBER	BEARING SERIES	DIMENSION (in mm)					WEIGHT (Kgs.)
			d	D	T	C	B	
BHP 0010	SKF VKBA 5425	566426.H195	68	125	115	47.80 40.80	61/ 54	4.49

BRAND	OEM PART NUMBER
RENAULT TRUCKS	7420518637
RENAULT TRUCKS	7421021391
VOLVO	20518637
VOLVO	20967831

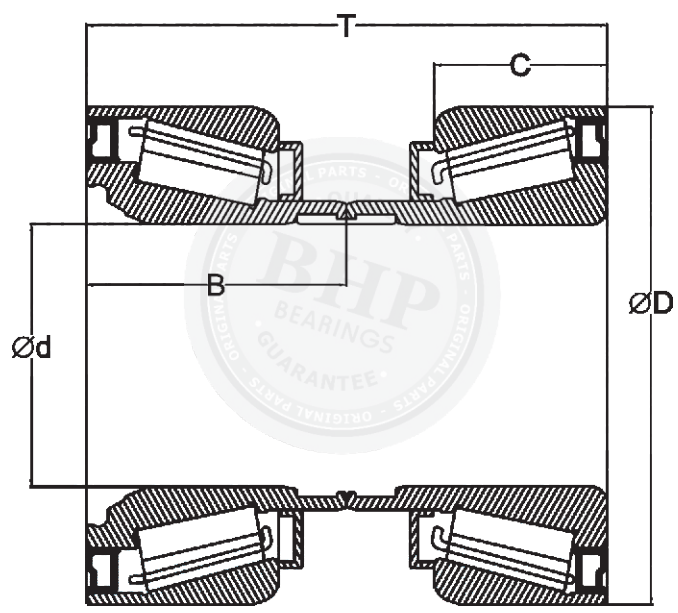

BHP PART NUMBER	REFERENCE PART NUMBER	BEARING SERIES	DIMENSION (in mm)					WEIGHT (Kgs.)
			d	D	T	C	B	
BHP 0011	SKF VKBA 5424	566427.H195	57.80	110	115	42.5 38.20	57.5	3.70

BRAND	OEM PART NUMBER
RENAULT TRUCKS	7420518617
RENAULT TRUCKS	7421021381
RENAULT TRUCKS	7421022433 / 7421022434
VOLVO	20518617 / 20967830

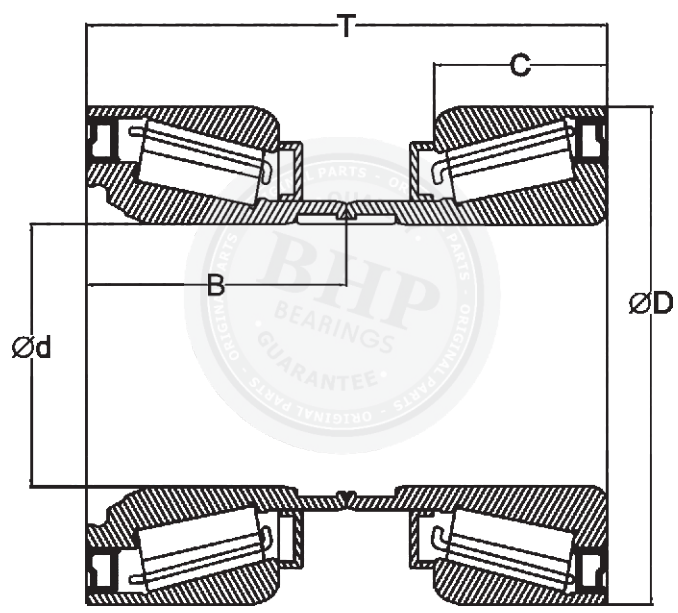

BHP PART NUMBER	REFERENCE PART NUMBER	BEARING SERIES	DIMENSION (in mm)					WEIGHT (Kgs.)
			d	D	T	C	B	
BHP 0012	TIMKEN SET 1351	F566834.H195	69.80	119.7	110	47.15 34.70	61/ 49	4.36

BRAND	OEM PART NUMBER
DAF	1391615
DAF	1801595

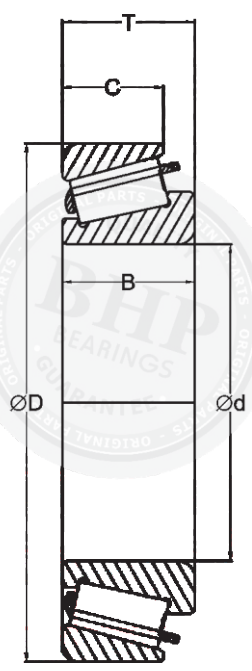

BHP PART NUMBER	REFERENCE PART NUMBER	BEARING SERIES	DIMENSION (in mm)					WEIGHT (Kgs.)
			d	D	T	C	B	
BHP 0013	-	567171	65	150	50	35	47.5	4.00

BRAND	OEM PART NUMBER

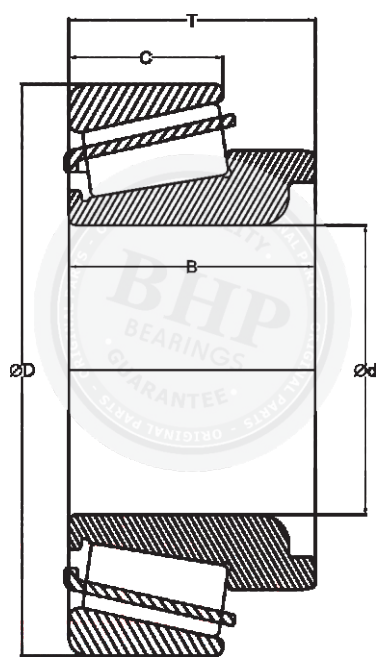

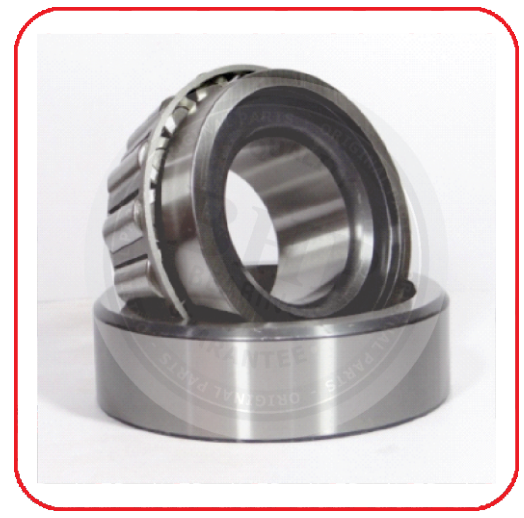

BHP PART NUMBER	REFERENCE PART NUMBER	BEARING SERIES	DIMENSION (in mm)					WEIGHT (Kgs.)
			d	D	T	C	B	
BHP 0014	SKF VKHB 2280	572813 / BT1B084/Q	70	150	64	42	61	4.80

BRAND	OEM PART NUMBER
MERCEDES BENZ	009 981 0805 / 009 981 6405
MERCEDES BENZ	013 981 4205 / 013 981 4305
VOLVO	3098132

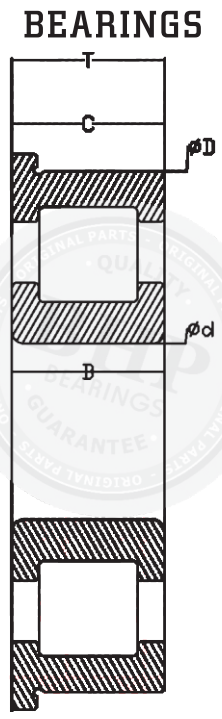

BHP PART NUMBER	REFERENCE PART NUMBER	BEARING SERIES	DIMENSION (in mm)					WEIGHT (Kgs.)
			d	D	T	C	B	
BHP 0015	FERSA - F19076	580989	38	94	31.5	33	31.5	1.16

BRAND	OEM PART NUMBER
SCANIA	1331313
SCANIA	1746781

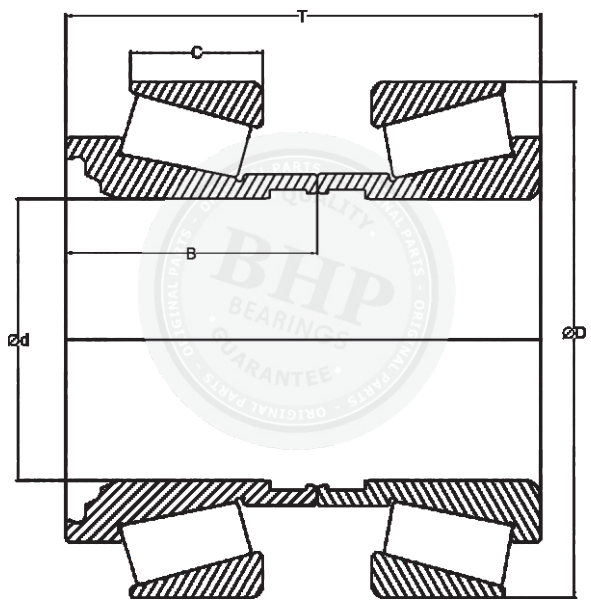

BHP PART NUMBER	REFERENCE PART NUMBER	BEARING SERIES	DIMENSION (in mm)					WEIGHT (Kgs.)
			d	D	T	C	B	
BHP 0016	SKF VKBA 5425	581079 A&C	68	125	115	32	61/54	4.49

BRAND	OEM PART NUMBER
RENAULT TRUCKS	7420518637 / 7421021391
VOLVO	20518637 / 20967831 / 21021391
VOLVO	3988673 / 3988674

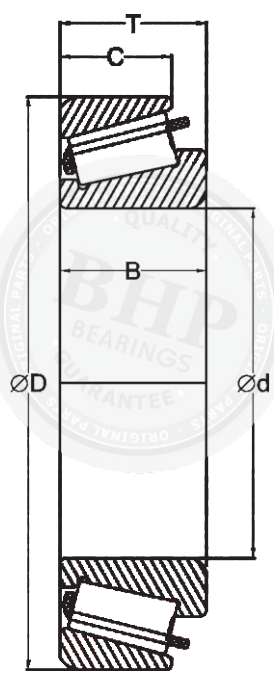

BHP PART NUMBER	REFERENCE PART NUMBER	BEARING SERIES	DIMENSION (in mm)					WEIGHT (Kgs.)
			d	D	T	C	B	
BHP 0017	SKF VKHB 2186	JHM 720249 JHM 720210	100	160	41	32	40	3.0

BRAND	OEM PART NUMBER
IVECO	8194959
MERITOR	98537

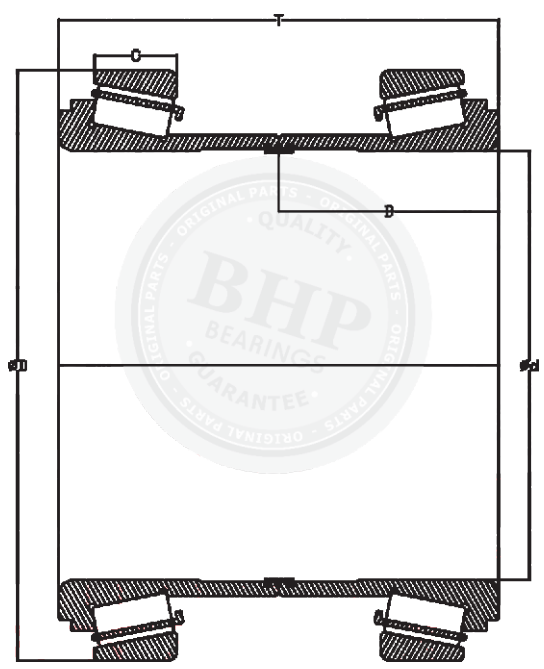

BHP PART NUMBER	REFERENCE PART NUMBER	BEARING SERIES	DIMENSION (in mm)					WEIGHT (Kgs.)
			d	D	T	C	B	
BHP 0018	FAG - 579065 D	800308	120	165	123	23	61.5	4.62

BRAND	OEM PART NUMBER
SAF	4200101500

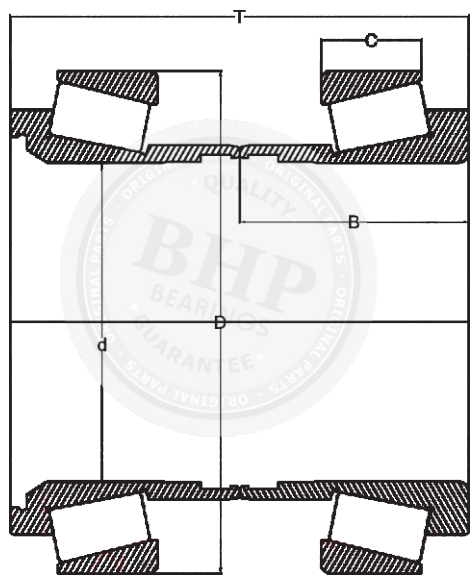

BHP PART NUMBER	REFERENCE PART NUMBER	BEARING SERIES	DIMENSION (in mm)					WEIGHT (Kgs.)
			d	D	T	C	B	
BHP 0019	SKF VKBA 5423	800792 A / C	93.8	148	135	29.5	67.5	6.05

BRAND	OEM PART NUMBER
RENAULT TRUCKS	7421036050 / 7420819860 / 7420819859
SCANIA	2277946
VOLVO	1075408 / 20518661 / 20792439

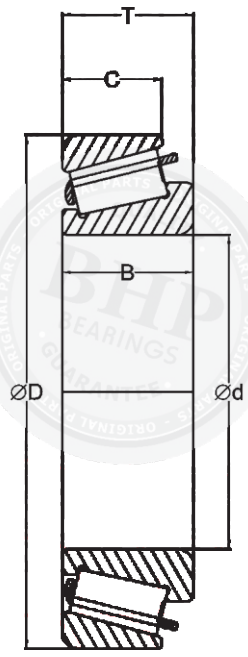

BHP PART NUMBER	REFERENCE PART NUMBER	BEARING SERIES	DIMENSION (in mm)					WEIGHT (Kgs.)
			d	D	T	C	B	
BHP 0020	SKF-BT1 0132 / QCL7C	801400A	80	165	57	43	57	5.800

BRAND	OEM PART NUMBER
MERCEDES BENZ	7220635100

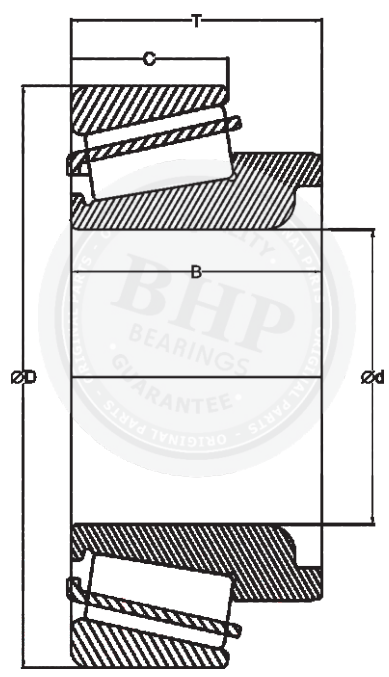

BHP PART NUMBER	REFERENCE PART NUMBER	BEARING SERIES	DIMENSION (in mm)					WEIGHT (Kgs.)
			d	D	T	C	B	
BHP 0021	SKF VKHB 2307	801785 A	70	150	74	50	74	5.77

BRAND	OEM PART NUMBER
MERCEDES BENZ	013 981 1405
MERCEDES BENZ	013 981 3905

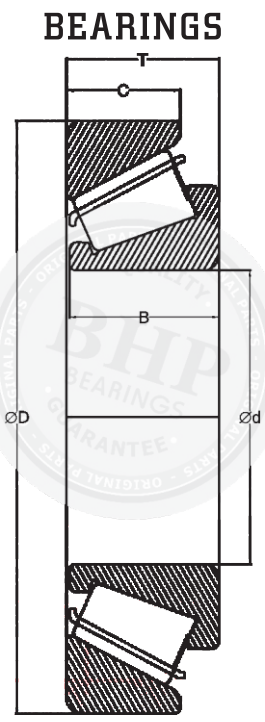

BHP PART NUMBER	REFERENCE PART NUMBER	BEARING SERIES	DIMENSION (in mm)					WEIGHT (Kgs.)
			d	D	T	C	B	
BHP 0022	-	801794B	65	152	48	35	45.5	4.48

BRAND	OEM PART NUMBER
MERCEDES BENZ	014 981 2005
MERCEDES BENZ	014 981 2105

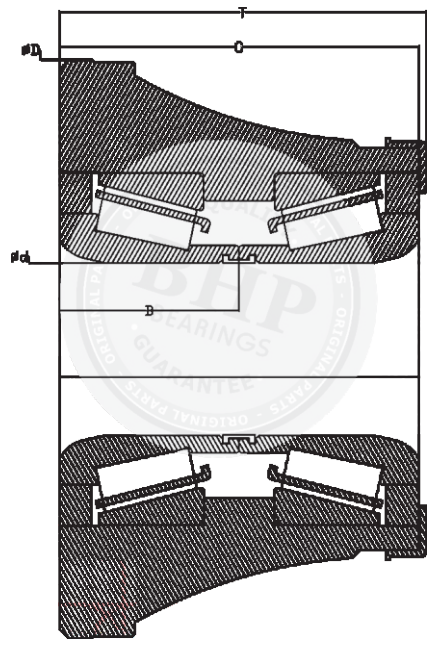

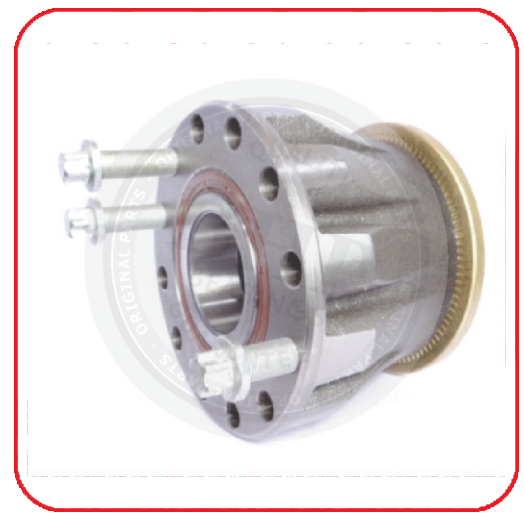

BHP PART NUMBER	REFERENCE PART NUMBER	BEARING SERIES	DIMENSION (in mm)					WEIGHT (Kgs.)
			d	D	T	C	B	
BHP 0023	SKF VKBA 5377	801974 HUB	70	196	130	-	-	14.60

BRAND	OEM PART NUMBER
IVECO	42541578
MAN TRUCKS	5006207845

BHP™
BEARINGS

An ISO 9001:2008 Certified Company

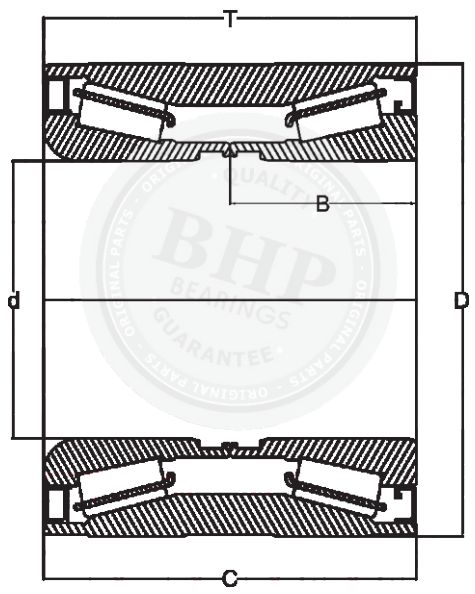

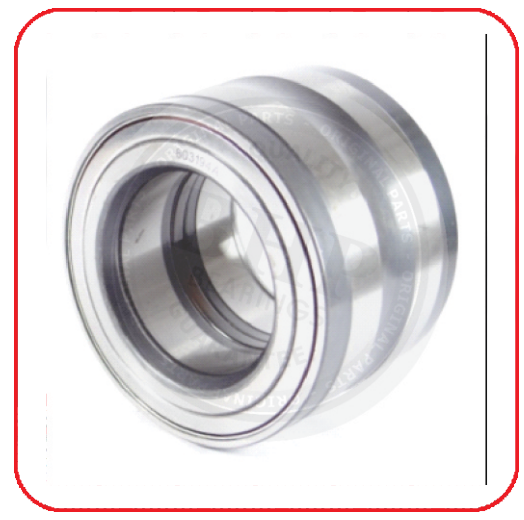

BHP PART NUMBER	REFERENCE PART NUMBER	BEARING SERIES	DIMENSION (in mm)					WEIGHT (Kgs.)
			d	D	T	C	B	
BHP 0024	FERSA - F15125	803194A	78	130	90	90	45	4.46

BRAND	OEM PART NUMBER
MERCEDES BENZ	0139812205

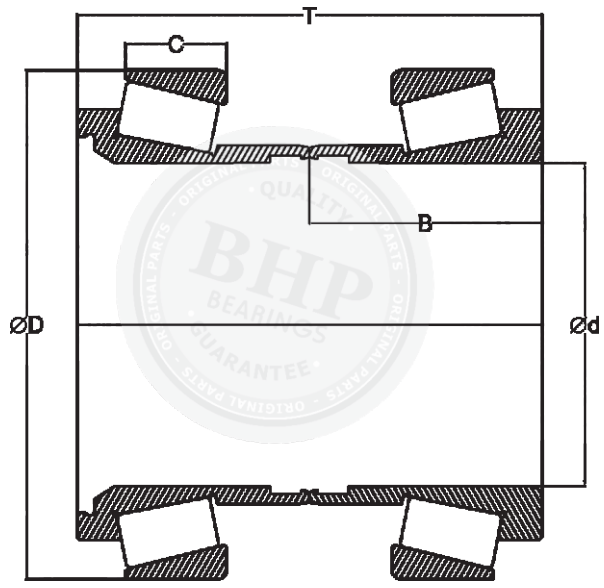

BHP PART NUMBER	REFERENCE PART NUMBER	BEARING SERIES	DIMENSION (in mm)					WEIGHT (Kgs.)
			d	D	T	C	B	
BHP 0025	SKF VKBA 5408	803750 A	105	160	140	34	70	6.89

BRAND	OEM PART NUMBER
IVECO	503126457
MAN	36 93420 0009
MAN	81 93420 0320 / 81 93420 0342 / 81 93420 0376
VOLVO	85110616

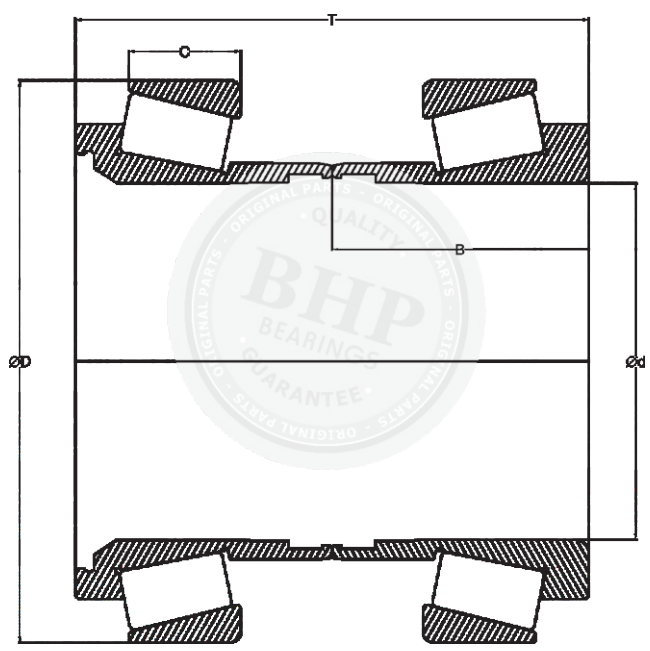

BHP PART NUMBER	REFERENCE PART NUMBER	BEARING SERIES	DIMENSION (in mm)					WEIGHT (Kgs.)
			d	D	T	C	B	
BHP 0026	SKF VKBA 5416	804162 A	110	170	146	37	76/70	8.53

BRAND	OEM PART NUMBER
MAN	81 93420 0346

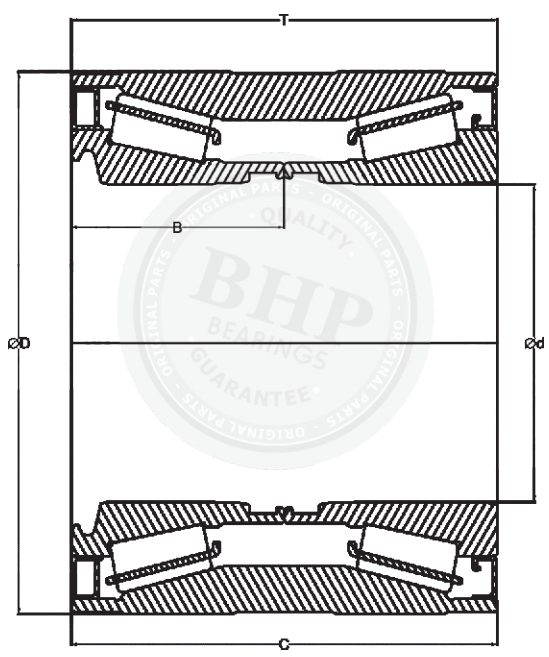

BHP PART NUMBER	REFERENCE PART NUMBER	BEARING SERIES	DIMENSION (in mm)					WEIGHT (Kgs.)
			d	D	T	C	B	
BHP 0027	SKF VKBA 5409	805011 C	82	140	110	110	55	6.59

BRAND	OEM PART NUMBER
IVECO	2994058
IVECO	7184079
IVECO	7184080
IVECO	85103258

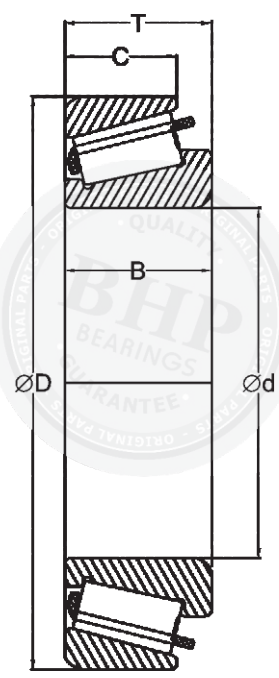

BHP PART NUMBER	REFERENCE PART NUMBER	BEARING SERIES	DIMENSION (in mm)					WEIGHT (Kgs.)
			d	D	T	C	B	
BHP 0028	SKF BT1 0132 / QCL7C	805015 / 543562	70	165	57	43	57	6.35

BRAND	OEM PART NUMBER
MERCEDES BENZ	014 981 4905
MERCEDES BENZ	014 981 5005

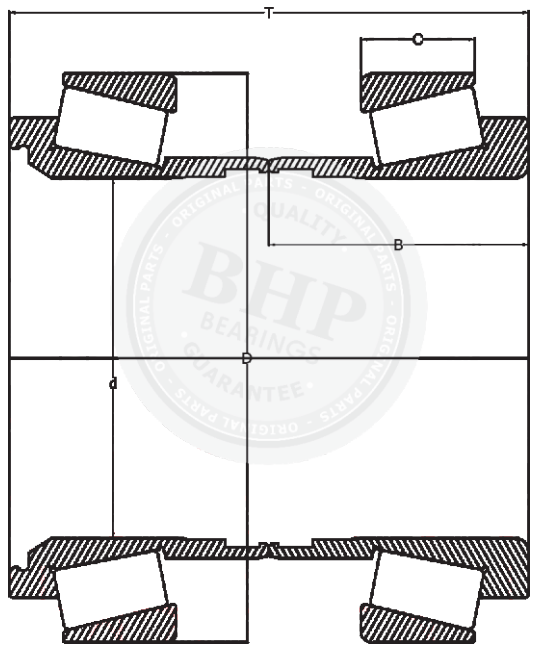

BHP PART NUMBER	REFERENCE PART NUMBER	BEARING SERIES	DIMENSION (in mm)					WEIGHT (Kgs.)
			d	D	T	C	B	
BHP 0029	FAG 70 -91615	805051 / 805052	70	124.9	110	26.15 32.00	61/49	4.150

BRAND	OEM PART NUMBER
DAF	1391617

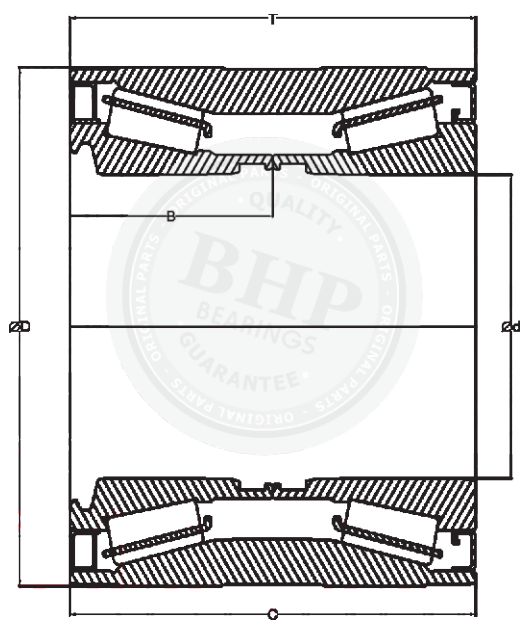

BHP PART NUMBER	REFERENCE PART NUMBER	BEARING SERIES	DIMENSION (in mm)					WEIGHT (Kgs.)
			d	D	T	C	B	
BHP 0030	SKF VKBA 5415	805092 C	78	130	90.5	90	45	4.34

BRAND	OEM PART NUMBER
IVECO	7182915
MAN	81 93420 0336 / 81 93420 0379
MAN	81 93420 6083 / 81 93420 6099
VOLVO	85103257

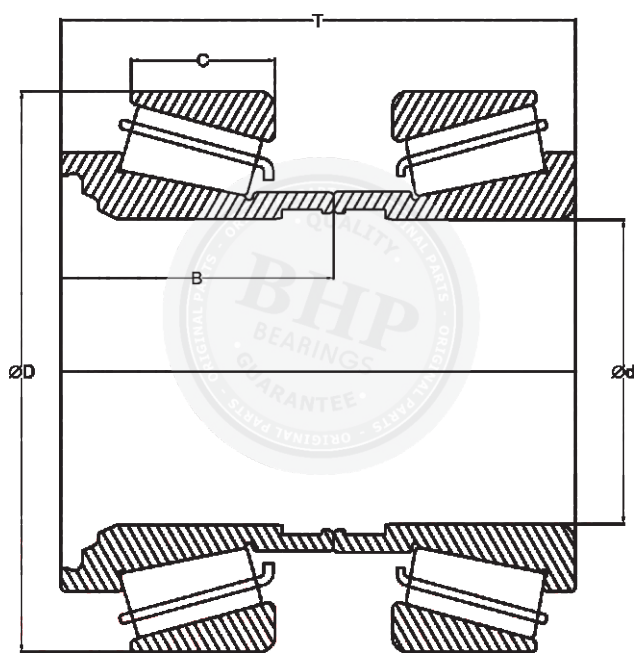

BHP PART NUMBER	REFERENCE PART NUMBER	BEARING SERIES	DIMENSION (in mm)					WEIGHT (Kgs.)
			d	D	T	C	B	
BHP 0031	SKF VKBA 5407	805165 A&C	57.8	110	115	29	57.5	3.30

BRAND	OEM PART NUMBER
VOLVO	20367196 / 20367197 / 20392010

BHP™

BEARINGS

An ISO 9001:2008 Certified Company

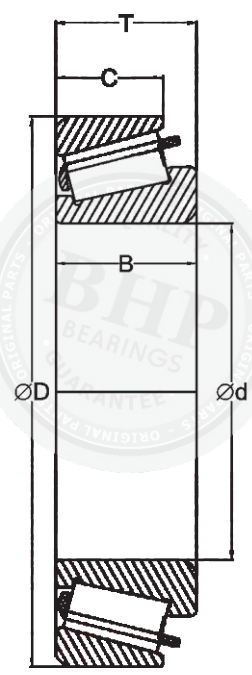

BHP PART NUMBER	REFERENCE PART NUMBER	BEARING SERIES	DIMENSION (in mm)					WEIGHT (Kgs.)
			d	D	T	C	B	
BHP 0032	FERSA - F25267	805312	100	160	44	36	44	3.24

BRAND	OEM PART NUMBER
MERCEDES BENZ	015 981 4705
MERCEDES BENZ	015 981 4805

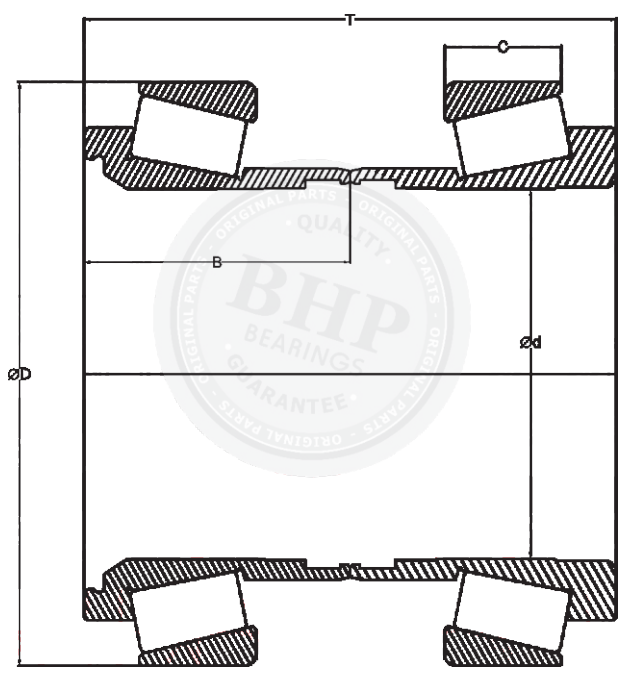

BHP PART NUMBER	REFERENCE PART NUMBER	BEARING SERIES	DIMENSION (in mm)					WEIGHT (Kgs.)
			d	D	T	C	B	
BHP 0033	FAG 569868. H195	805415	82	138	110	34	58.30/ 51.7	5.2

BRAND	OEM PART NUMBER
SAF	3307303000
SAF	3307303001

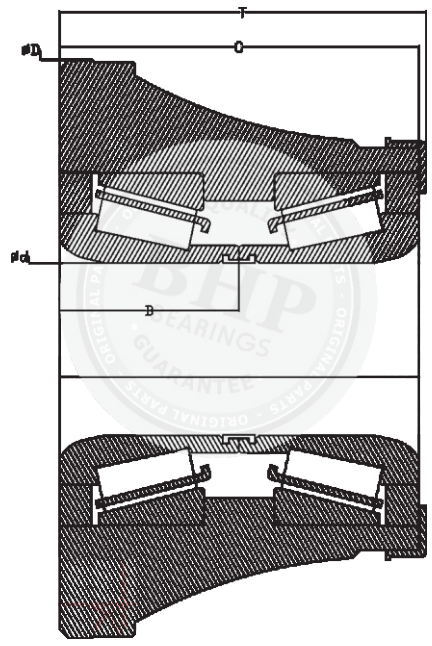

BHP PART NUMBER	REFERENCE PART NUMBER	BEARING SERIES	DIMENSION (in mm)					WEIGHT (Kgs.)
			d	D	T	C	B	
BHP 0034	SKF VKBA 5549	805415 HUB	82	196	110	34	58.30 51.7	15.3

BRAND	OEM PART NUMBER
SAF	3434365000
SAF	3434301800

BHP™
BEARINGS

An ISO 9001:2008 Certified Company

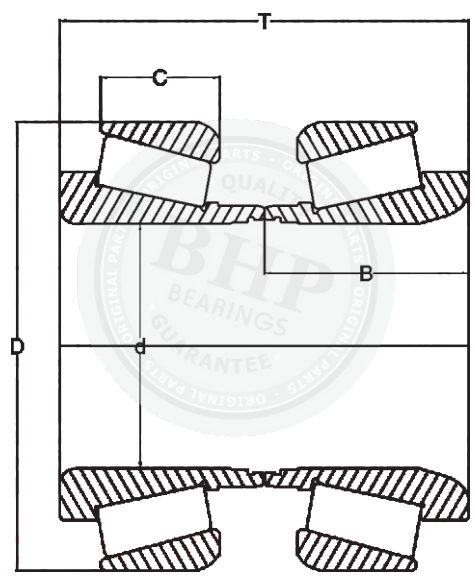

BHP PART NUMBER	REFERENCE PART NUMBER	BEARING SERIES	DIMENSION (in mm)					WEIGHT (Kgs.)
			d	D	T	C	B	
BHP 0035	FAG 805532	805531 A / C	60	110	100	29	50	3.2

BRAND	OEM PART NUMBER
RENAULT	20367196
VOLVO	20392010

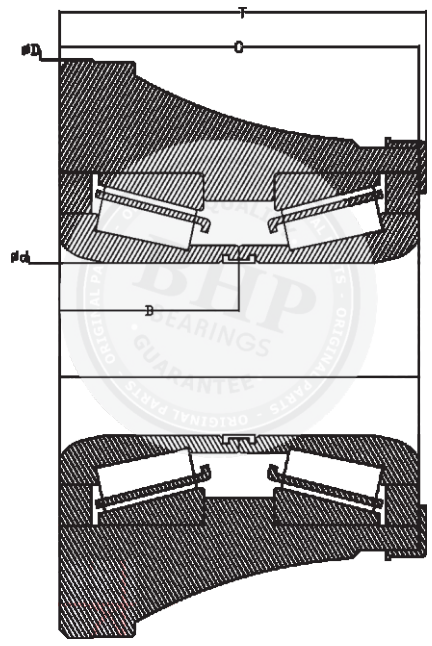

BHP PART NUMBER	REFERENCE PART NUMBER	BEARING SERIES	DIMENSION (in mm)					WEIGHT (Kgs.)
			d	D	T	C	B	
BHP 0036	SKF BTF 068	805532 HUB	60	168	102	-	-	9.990

BRAND	OEM PART NUMBER
RENAULT	20550678
VOLVO	5010587029

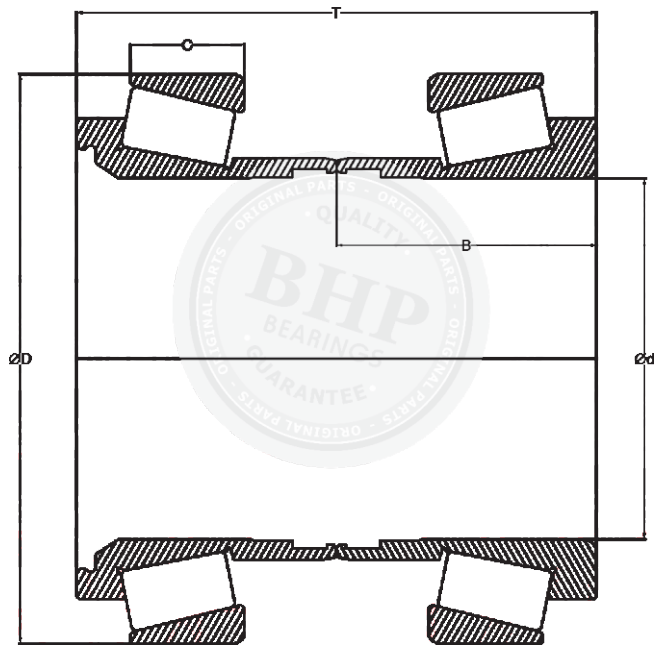

BHP PART NUMBER	REFERENCE PART NUMBER	BEARING SERIES	DIMENSION (in mm)					WEIGHT (Kgs.)
			d	D	T	C	B	
BHP 0037	FAG-570530. H195	808918 A / C	88	138	110	30	50	4.20

BRAND	OEM PART NUMBER
SAF	3434302000

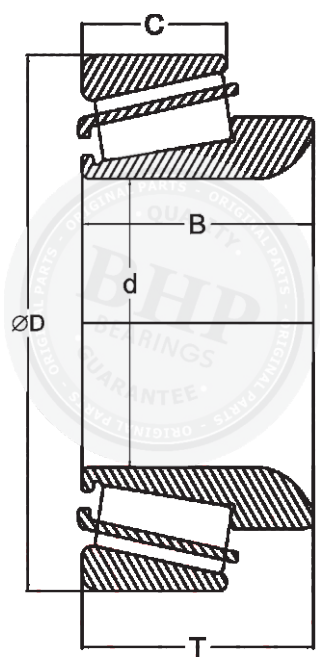

BHP PART NUMBER	REFERENCE PART NUMBER	BEARING SERIES	DIMENSION (in mm)					WEIGHT (Kgs.)
			d	D	T	C	B	
BHP 0038	SKF VKHB 2029	HM218248/10	89.975	146.975	40	32.5	40	2.57

BRAND	OEM PART NUMBER
MERITOR	99041035B / 99041035S
RENAULT	0023336108
SAF	04 200 1006 00 / 4 200 1006 00
SCANIA	1524625 / 291060

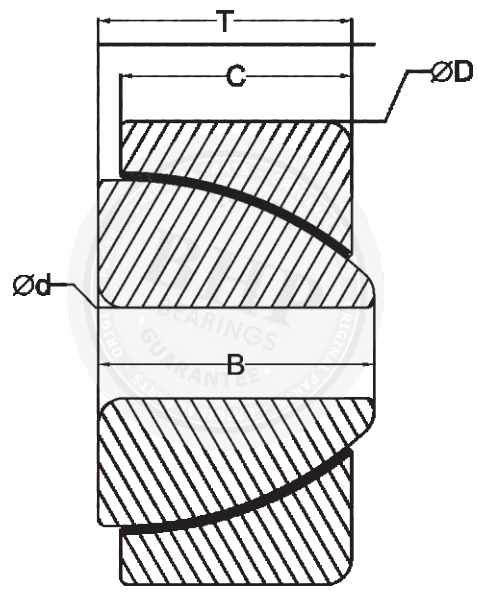

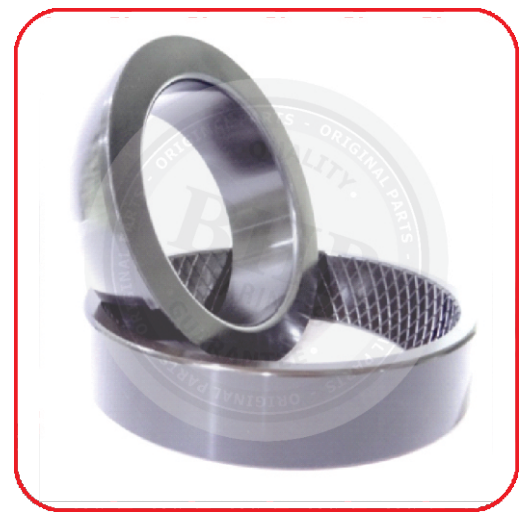

BHP PART NUMBER	REFERENCE PART NUMBER	BEARING SERIES	DIMENSION (in mm)					WEIGHT (Kgs.)
			d	D	T	C	B	
BHP 0039	SKF BSFB 145	BLAB366485 C	95	145	37	31	37	2.350

BRAND	OEM PART NUMBER
MAN	06369590030

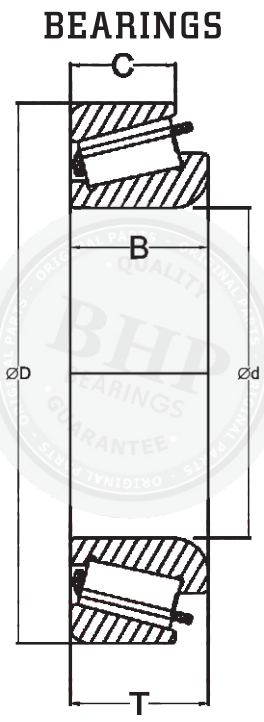

BHP PART NUMBER	REFERENCE PART NUMBER	BEARING SERIES	DIMENSION (in mm)					WEIGHT (Kgs.)
			d	D	T	C	B	
BHP 0040	SKF VKHB 2315	BT1 0163/Q	82	140	36.5	28.5	36.25	2.100

BRAND	OEM PART NUMBER
MERITOR	99041075

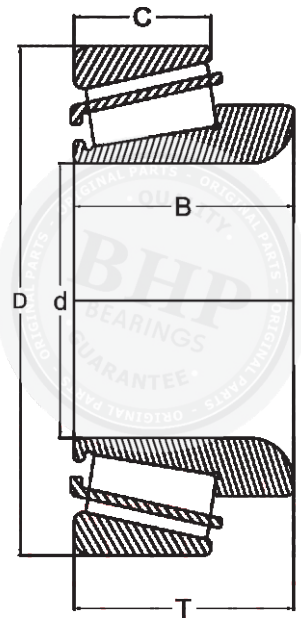

BHP PART NUMBER	REFERENCE PART NUMBER	BEARING SERIES	DIMENSION (in mm)					WEIGHT (Kgs.)
			d	D	T	C	B	
BHP 0041	SKF VKHB 2240	BT1B 328251/Q	55	100	40	21	38.25	1.130

BRAND	OEM PART NUMBER
MAN	06.32489.0072 / 06 32489 0073

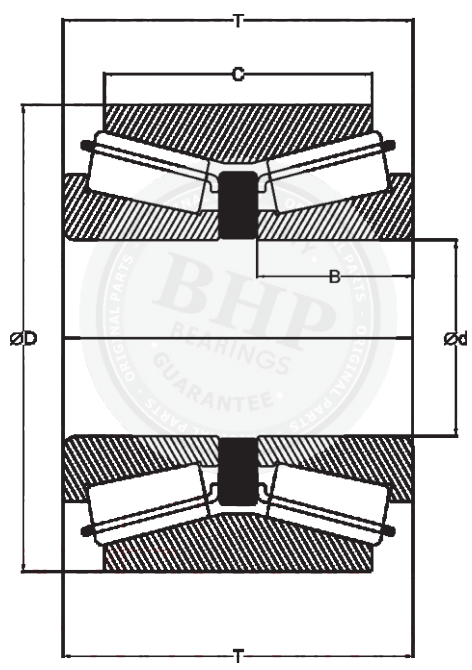

BHP PART NUMBER	REFERENCE PART NUMBER	BEARING SERIES	DIMENSION (in mm)					WEIGHT (Kgs.)
			d	D	T	C	B	
BHP 0042	SKF VKBA 804	BT1B 441026	55	100	56	42.5	25	1.720

BRAND	OEM PART NUMBER
MAN	06.32489.0072 / 06 32489 0073

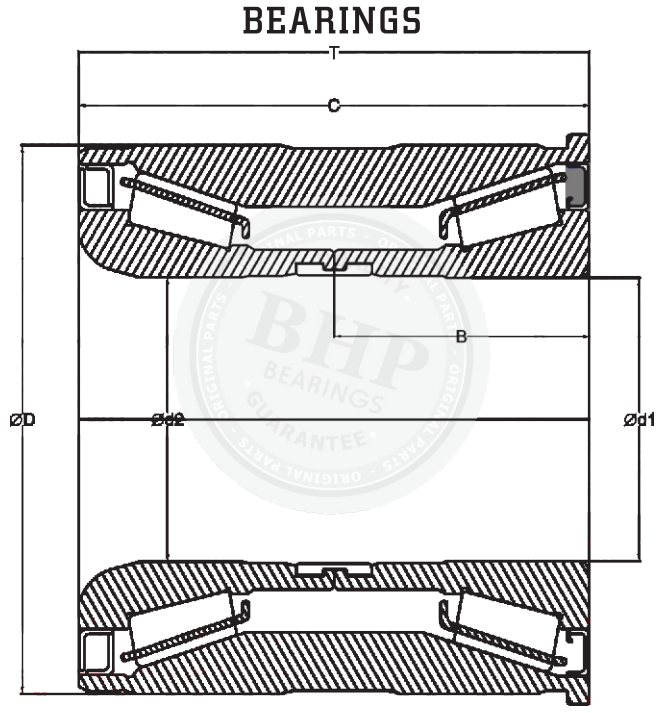

BHP PART NUMBER	REFERENCE PART NUMBER	BEARING SERIES	DIMENSION (in mm)					WEIGHT (Kgs.)
			d	D	T	C	B	
BHP 0043	SKF VKBA 5314	BTH 0018 A	68/ 68.2	127/	115	115	57.5/ 57.50	6.15

BRAND	OEM PART NUMBER
SCANIA	1413785 / 1439070
SCANIA	1443078 / 1476945
SCANIA	1724482 / 1868087

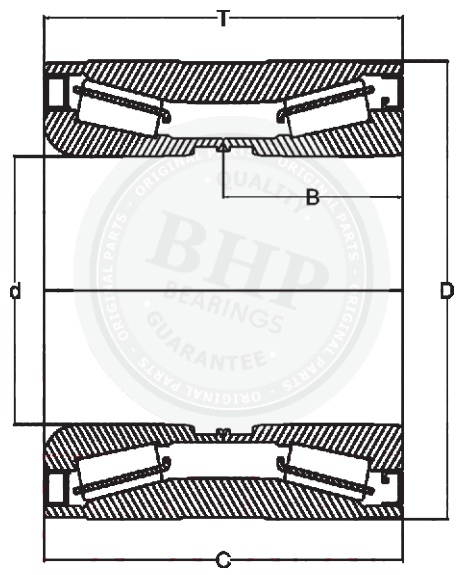

BHP PART NUMBER	REFERENCE PART NUMBER	BEARING SERIES	DIMENSION (in mm)					WEIGHT (Kgs.)
			d	D	T	C	B	
BHP 0044	SKF VKBA 5412	BTH 0022	82	140	115	115	57.5 57.5	6.45

BRAND	OEM PART NUMBER
MERCEDES BENZ	014 981 5105
MERCEDES BENZ	014 981 5105
MERCEDES BENZ	014 981 9305
MERCEDES BENZ	014 981 9305

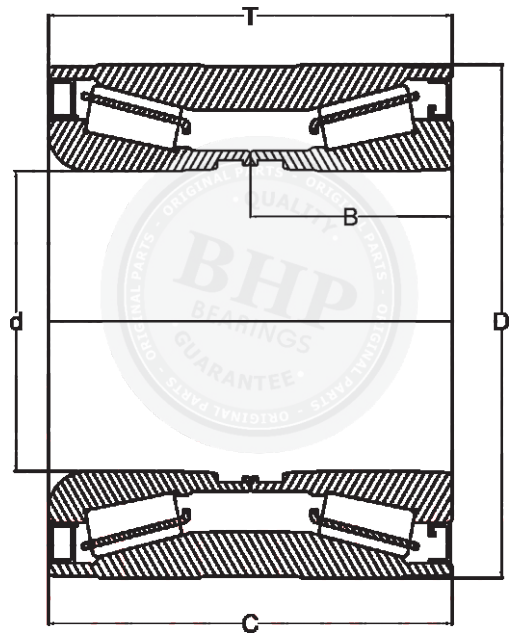

BHP PART NUMBER	REFERENCE PART NUMBER	BEARING SERIES	DIMENSION (in mm)					WEIGHT (Kgs.)
			d	D	T	C	B	
BHP 0045	SKF VKBA 3522	BTH 1011	55	90	60	60	30.09	1.400

BRAND	OEM PART NUMBER
IVECO	7180066

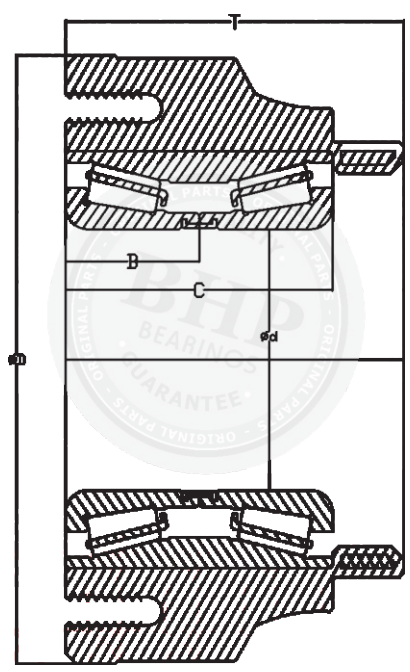

BHP PART NUMBER	REFERENCE PART NUMBER	BEARING SERIES	DIMENSION (in mm)					WEIGHT (Kgs.)
			d	D	T	C	B	
BHP 0046	FAG 71369830	BTH 1011 HUB	55	133	78	60	30.09	4.675

BRAND	OEM PART NUMBER
IVECO	504166117

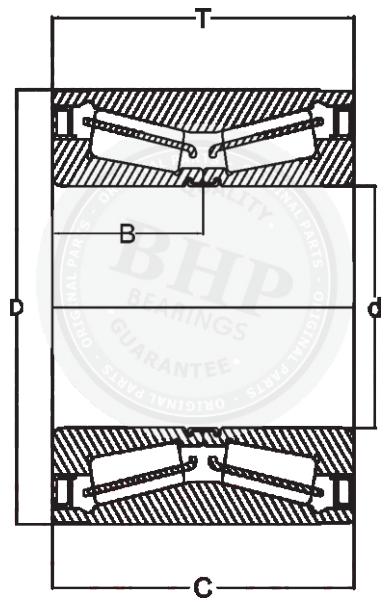

BHP PART NUMBER	REFERENCE PART NUMBER	BEARING SERIES	DIMENSION (in mm)					WEIGHT (Kgs.)
			d	D	T	C	B	
BHP 0047	FAG 201050	DU 60108	60	108	75	75	37.55	2.83

BRAND	OEM PART NUMBER
MERCEDES BENZ	015 981 1905

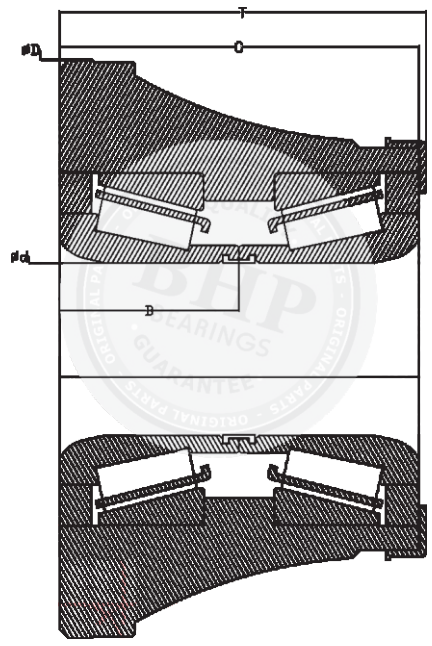

BHP PART NUMBER	REFERENCE PART NUMBER	BEARING SERIES	DIMENSION (in mm)					WEIGHT (Kgs.)
			d	D	T	C	B	
BHP 0048	SKF BTF 0045	HUR 040 HUB	70	194	112	-	-	10.00

BRAND	OEM PART NUMBER
RENAULT	5010439770

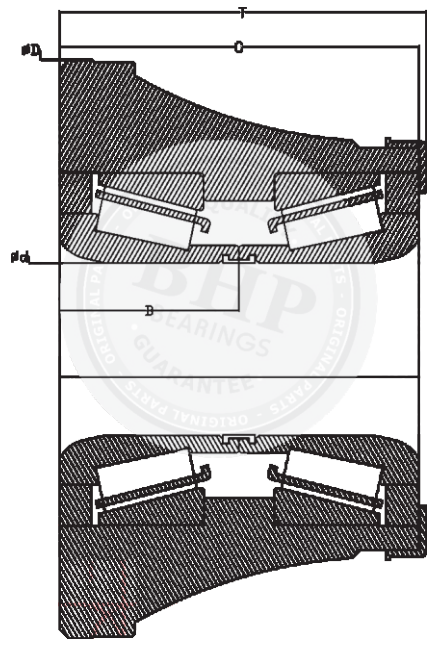

BHP PART NUMBER	REFERENCE PART NUMBER	BEARING SERIES	DIMENSION (in mm)					WEIGHT (Kgs.)
			d	D	T	C	B	
BHP 0049	-	HUR 065 HUB	65	194	110	110	55	9.300

BRAND	OEM PART NUMBER
-	-

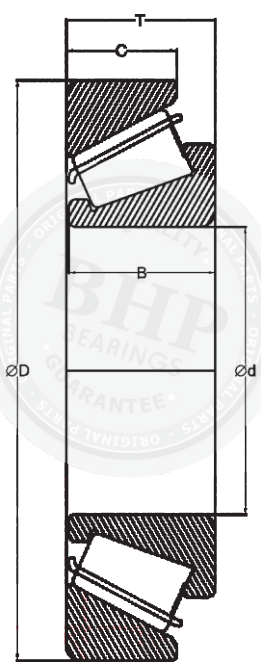

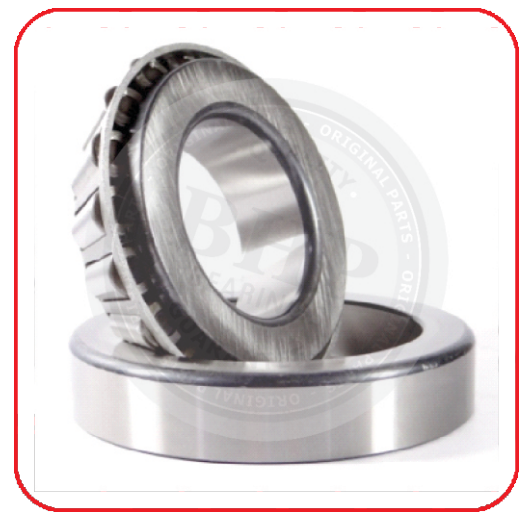

BHP PART NUMBER	REFERENCE PART NUMBER	BEARING SERIES	DIMENSION (in mm)					WEIGHT (Kgs.)
			d	D	T	C	B	
BHP 0050	SKF VKT 8631	JW 7049 / JW 7010	70	140	39	27	35.5	2.59

BRAND	OEM PART NUMBER
VOLVO	184671

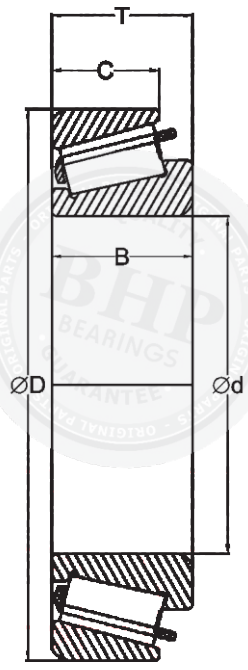

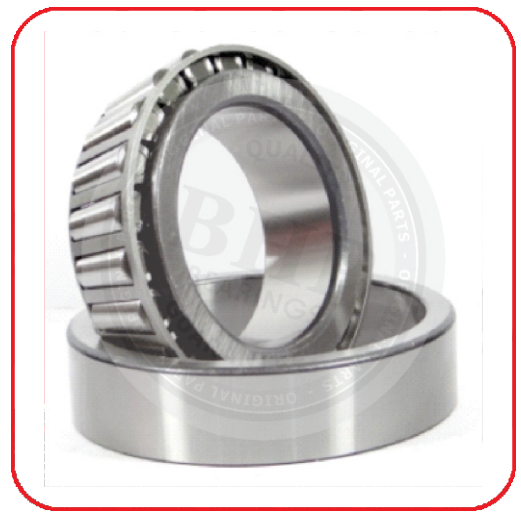

BHP PART NUMBER	REFERENCE PART NUMBER	BEARING SERIES	DIMENSION (in mm)					WEIGHT (Kgs.)
			d	D	T	C	B	
BHP 0051	SKF VKHB 2147	T2 EE 100/Q	100	165	47	39	46	3.840

BRAND	OEM PART NUMBER
DAF	1603193

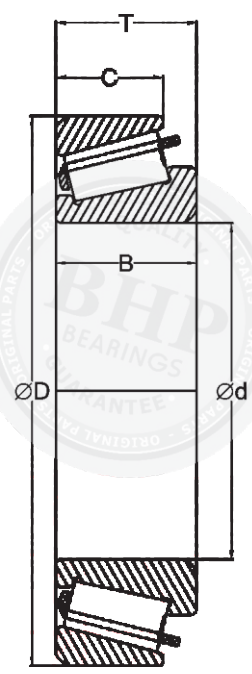

BHP PART NUMBER	REFERENCE PART NUMBER	BEARING SERIES	DIMENSION (in mm)					WEIGHT (Kgs.)
			d	D	T	C	B	
BHP 0052	FAG 576376	T5 ED 100	100	160	42	34	40	3.13

BRAND	OEM PART NUMBER
DAF	0658448 / 658448

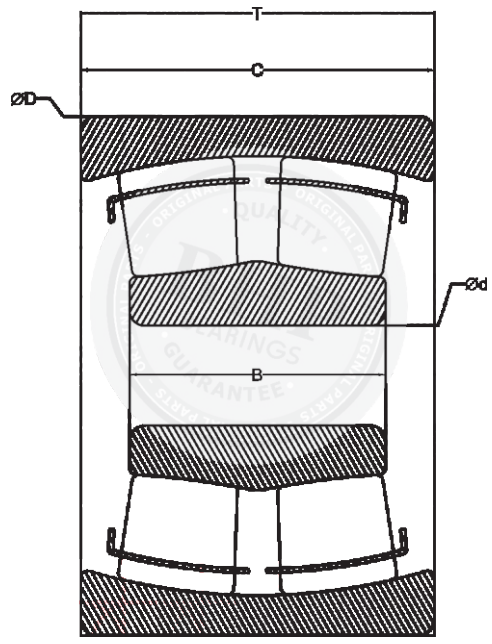

BHP PART NUMBER	REFERENCE PART NUMBER	BEARING SERIES	DIMENSION (in mm)					WEIGHT (Kgs.)
			d	D	T	C	B	
BHP 0053	FAG 804312A	W 220 / 804312 A	120	215	80	80	58	12.990

BRAND	OEM PART NUMBER
-	-

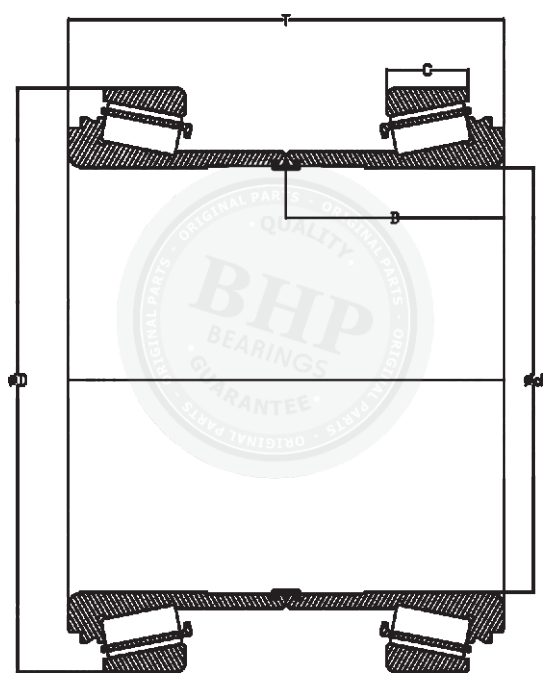

BHP PART NUMBER	REFERENCE PART NUMBER	BEARING SERIES	DIMENSION (in mm)					WEIGHT (Kgs.)
			d	D	T	C	B	
BHP 0054	566830.H195	803904	120	175	123	29	61.55	6.450

BRAND	OEM PART NUMBER
SAF	03434301200

QUALITY CONTROL

MANUFACTURING PROCESS

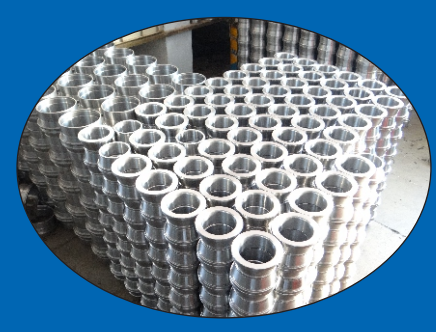

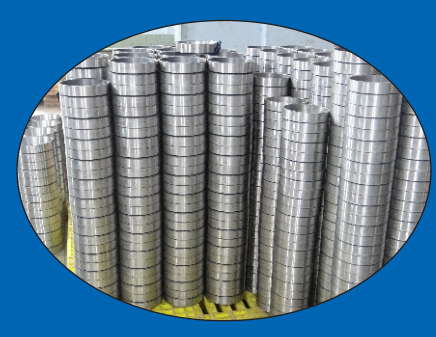

RANGE LIST

SR.	SERIES	d (mm)	D (mm)	T (mm)	Weight (Kg.)	BRAND	OEM No.	OTHER MFG.	PART NO.
1	30204	20	47	15.25	0.12	BPW	02 6401 20 00	ISO	T2DB020
2	30205	25	52	16.25	0.15	BPW/RENAULT TRUCKS	02 6401 25 00/7703090098	SKF/SNR	VKHB 2189/HDB044
3	30206	30	62	17.25	0.222	BPW/SAF	02 6401 30 00/4 200 0003 00	ISO/TIMKEN	T3DB030/SET 1015
4	30207	35	72	18.25	0.32	VOLVO	11042	TIMKEN/ISO	SET 1016/T3DB035
5	30208	40	80	19.75	0.41	VOLVO	183232	SKF/TIMKEN	VKT 8647/SET 1017
6	30209	45	85	20.75	0.46	BPW/ZF	0264014500/0635371036	ISO/SKF/TIMKEN	T3DB045/VKHB2296/SET1018
7	30210	50	90	21.75	0.529	BPW/MAN	0264015000/06324890047	ISO/SKF/TIMKEN	T3DB045/VKHB2167/SET1019
8	30211	55	100	22.75	0.687	IVECO	38540711	ISO	T3DB055
9	30212	60	110	23.75	0.869	BPW/MAN	0264016000/06324890055	ISO/TIMKEN	T3EB060/SET1020
10	30213	65	120	24.75	1.103	IVECO	26800010	ISO	T3EB065
11	30214	70	125	26.25	1.222	MAN	06324890018/85900013203	ISO/TIMKEN	T3EB070/SET1021
12	30215	75	130	27.25	1.347	IVECO/MAN	1102857/06324890019	ISO/SKF/SNR	T4DB075/VKHB2168/HDB043
13	30216	80	140	28.25	1.6	IVECO/KASSBOHRER/MERCEDES	26800040/6691128000/0009810205	ISO/SKF/SNR/TIMKEN	T3EB080/VKHB2204/DB084/SET1022
14	30217	85	150	30.5	2.05	DAF/IVECO/MAN	1344264/1109968/81934200329	ISO/SKF/TIMKEN	T3EB085/VKT8490/SET1023
15	30219	95	170	34.5	3	VOLVO	181114	ISO/TIMKEN/SKF	T3FB095/FT30219/9935
16	30220	100	180	37	3.65	MAN	03624805000/64934200023	ISO/SKF/SNR/TIMKEN	T3FB100/VKHB2164HDB017/SET1025
17	30221	105	190	39	4.22	IVECO	1102864	ISO/SKF/SNR/TIMKEN	T3FB105/VKHB2215/HDB003/SET1026
18	30222	110	200	41	5	-	-	ISO	T3FB110
19	30224	120	215	43.5	6.25	-	-	ISO	T4FB120
20	30306	30	72	20.75	0.39	FIAT/MERCEDES BENZ	26800340/631 981 0605	ISO/TIMKEN	T2FB030/SET 1029
21	30307	35	80	22.75	0.52	IVECO/SAF	26800350/04 200 0011 00	SKF/TIMKEN	VKHB 2202/SET 1030
22	30308	40	90	25.25	0.72	MERCEDES BENZ	19813105	ISO	T2FB040
23	30309	45	100	27.25	0.97	IVECO/MERCEDES BENZ	26800370/0019813705	ISO/SKF/SNR/TIMKEN	TCFB045/VKHB2201/SDB046/SET1031
24	30310	50	110	29.25	1.25	IVECO/SAF	26800380/04200001300	ISO	T2FB050
25	30311	55	120	31.5	1.53	ISO/SAF	06324890026/04200001400	ISO/SKF/SNR	T2FB055/VKHB2198/SDB045
26	30312	60	130	33.5	1.95	IVECO/MAN/MERCEDES	1102859/06324890113/0009810505	ISO/SKF/SNR	T2FB060/VKT8720/HDB049
27	30313	65	140	36	2.4	BPW/DAF/MERCEDES	0264026500/736128/0099818305	ISO/SKF/TIMKEN	T2GB065/VKHB2304/SET1033
28	30314	70	150	38	3	MERCEDES BENZ/VOLVO	0019817505/1522556	ISO/SNR/TIMKEN	T2GB070/HDB040/SET1034

RANGE LIST

SR.	SERIES	d (mm)	D (mm)	T (mm)	Weight (Kg.)	BRAND	OEM No.	OTHER MFG.	PART NO.
29	30314 D	70	150	38	2.95	-	-	-	-
30	30314 M	70	150	36	3	-	-	-	-
31	30315	75	160	40	3.57	MERCEDES,IVECO,RENAULT,SCANIA,SAF	-	ISO	T2GB075
32	30316	80	170	42.5	4.34	RENAULT	959330316	ISO	T2GB080
33	30317	85	180	44.5	4.84	FIAT	26800450	-	-
34	31310	50	110	29.25	1.2	VOLVO	183686	ISO	T7FB050
35	31312 L	60	135	33.5	1.92	DAF,MAN,SCANIA	-	-	-
36	31313 A	65	140	36	2.35	DAF/MAN/MERCEDES BENZ/SCANIA	384810/06 32499 0022/013 981 6205/129289	ISO/SKF	T7GB065/VKT 8761
37	31311	55	120	31.5	1.55	MERCEDES/SCANIA/ZF	0009810005/14144/0635375004	ISO/SKF	T7FB055/VKT8759
38	31314	70	150	38	2.95	VOLVO	1673537	ISO	T7GB070
39	31315	75	160	40	3.5	VOLVO/ZF	181396/0735370299	ISO/SKF	T7GB075/VKT8633
40	32010	50	80	20	0.365	MERCEDES/RENAULT TRUCKS/VOLVO	0099814105/5000392236/1524988	ISO/SKF/SNR	T3CC050/VKHB2191/HDB073
41	32013	65	100	23	0.62	IVECO/RENAULT TRUCKS/ZF	7164487/5000685691/0635370020	ISO/SKF/SNR/TIMKEN	T4CC065/VKHB2199/HDB075/SET1043
42	32014	70	110	25	0.82	IVECO/MERCEDES BENZ	1905216/000720032014	ISO/SKF/SNR/TIMKEN	T4CC070/VKHB2154/HDB063/SET1044
43	32016	80	125	29	1.246	DAF/MERCEDES BENZ	1400270/0079819005	ISO/SKF/SNR/TIMKEN	T3CC080/VKHB2157/HDB065/SET1046
44	32017	85	130	29	1.325	FIAT/MAN	60115335/06324800060	ISO/SKF/SNR/TIMKEN	T4CC085/VKHB2169/HDB006/SET1047
45	32018	90	140	32	1.707	DAF/IVECO/MAN	077060/1103228/06324890011	ISO/SKF/SNR	T3CC090/VKHB2170/HDB067
46	32019	95	145	32	1.79	DAF/MAN	622103/06324890012	ISO/SKF/SNR/TIMKEN	T4CC095/VKHB2161/HDB001/SET1049
47	32020	100	150	32	1.845	DAF/IVECO/MAN/MERCEDES BENZ	699117/1905027/06324890119/0019816405	ISO/SKF/SNR/TIMKEN	T4CC100/VKHB2306/HDB019/SET1050
48	32021	105	160	35	2.5	IVECO/KASSBOHRER/MAN	1104922/6691453000/06324890070	ISO/SKF/SNR	T4DC105/VKHB2160/HDB066
49	32022	110	170	38	2.96	DAF/KASSBOHRER/MERCEDES BENZ	1453936/6691450000/0059819005	ISO/SKF/SNR/TIMKEN	T4DC110/VKHB2281/HDB085/SET1052
50	32024	120	180	38	3.28	DAF/IVECO/MAN	1672507/1102860/06324801800	ISO/SKF/SNR/TIMKEN	T4DC120/VKHB2216/HDB016/SET1053
51	32204	20	47	19.25	0.159	MAZDA	1312-33-065	ISO	T2DD020
52	32205	25	52	19.25	0.19	MERCEDES	19818881	ISO	T2CD025
53	32206	30	62	21.25	0.28	DAF/IVECO/MAN/MERCEDES BENZ	1400078/1905272/06 32499 0066/000720 032206/7703090085	SKF/SNR/ISO	VKHB 2016/HDB031/T3DC030
54	32207	35	72	24.25	0.426	IVECO/MAN/MERCEDES BENZ	26800130/06324990068/3199810005	ISO/SKF/SNR	T3DC035/VKHB2018/HDB033
55	32208	40	80	24.75	0.514	GIGANT/IVECO/MAN	10500474/26800140/06324890080	ISO/SKF/SNR	T3DC040/VKHB2020/HDB035
56	32209	45	85	24.75	0.558	IVECO/RENAULT TRUCKS/SAF/VOLVO	1101909/5516010587/4200002200/3094047	ISO/SKF/SNR/TIMKEN	T3DC045/VKHB2015/HDB030/SET1058

RANGE LIST

SR.	SERIES	d (mm)	D (mm)	T (mm)	Weight (Kg.)	BRAND	OEM No.	OTHER MFG.	PART NO.
57	32210	50	90	24.75	0.601	GIGANT/IVECO/MERCEDES BENZ	10500496/1110003/0009813605	ISO/SKF/SNR	T3DC050/VKHB2017/HDB032
58	32211	55	100	26.75	0.83	GIGANT/IVECO/MAN	10500498/1125929/06324990001	ISO/SKF/SNR/TIMKEN	T3DC055/VKHB2019/HDB034/SET 1060
59	32212	60	110	29.75	1.119	BPW/DAF/FIAT/GIGANT	0264056000/1602388/26800180/10500481	ISO/SKF/SNR/TIMKEN	T3EC060/VKHB2347/VKT8690/SET1061
60	32213	65	120	32.75	1.472	IVECO/RENAULT TRUCKS/SAF/ZF	26800190/5000682113/04200002300/0635373018	ISO/SKF/SNR/TIMKEN	T3EC065/VKHB2288/HDB051/SET1062
61	32214	70	125	33.25	1.558	GIGANT/IVECO/MAN/MERCEDES BENZ	10500503/1103142/06324990004/0019818005	ISO/SKF/SNR/TIMKEN	T3EC070/VKHB2284/HDB050/SET1063
62	32215	75	130	33.25	1.652	IVECO/MAN/MERCEDES BENZ	1103771/A0773221500/3279810305	ISO/SKF/SNR/TIMKEN	T4DC075/VKHB2033/HDB037/SET 1064
63	32216	80	140	35.25	2.098	IVECO/KASSBOHRER/MERCEDES BENZ	26800220/6691159000/0009819405	ISO/SKF/SNR/TIMKEN	T3EC080/VKHB2026/HDB012/SET1065
64	32217	85	150	38.5	2.524	IVECO/MAN/MERCEDES BENZ/VOLVO	1905354/87523301210/3279812205/1524857	ISO/SKF/SNR/TIMKEN	T3EC085/VKHB2080/HDB042/SET 1066
65	32218	90	160	42.5	3.3	IVECO/KASSBOHRER/MERCEDES BENZ	1905353/6691161000/720032218	ISO/SKF/SNR/TIMKEN	T3FC090/VKHB 2030/HDB036/SET1067
66	32219	95	170	45.5	3.962	BPW/GIGANT/IVECO/SAF/VOLVO	0264059500/10500859/1905350/4200002600/181086	ISO/SKF/SNR/TIMKEN	T3FC095/VKHB2031/HDB090/SET1068
67	32220	100	180	49	4.9	DAF/GIGANT/IVECO/MERITOR	1409087/10500505/7178989/99041058	ISO/SKF/SNR/TIMKEN	T3FC100/VKHB2297/HDB089/SET 1069
68	32221	105	190	53	6.07	IVECO/SAF	26800270/4200002800	ISO/SKF/SNR/TIMKEN	T3FC105/VKHB2212/HDB076/SET1070
69	32222	110	200	56	7.1	BPW/GIGANT	0264051100/10500872	ISO	T3FC110
70	32307	35	80	32.75	0.721	IVECO	1110016	ISO/SKF/SNR/TIMKEN	T2FE035/VKHB2063/HDB039/SET1075
71	32308	40	90	35.25	1.009	IVECO/MAN/SCANIA/VOLVO	1126887/06324990015/14698/181669	ISO/SKF/SNR/TIMKEN	T2FD040/VKHB2001/HDB025/SET1076
72	32308 B	40	90	35.25	1.07	IVECO/MAN	-	-	-
73	32309	45	100	38.25	1.355	BPW/DAF/FIAT/IVECO/SCANIA	0264064500/283684/1110018/1110019/14623	ISO/SKF/SNR/TIMKEN	T5FD045/VKHB2004/HDB028/SET1078
74	32310	50	110	42.25	1.78	BPW/DAF/FIAT/IVECO/VOLVO	0264102500/556289/1110020/26800600/11062	ISO/SKF/SNR/TIMKEN	T2FD050/VKHB2070/HDB009/SET1079
75	32311	55	120	45.5	2.34	DAF/IVECO/MAN	275828/26800610/06324990017	ISO/SKF/SNR/TIMKEN	T2FD055/VKHB2002/HDB015/SET1080
76	32311 B	55	120	45.5	2.5	-	-	-	-
77	32312	60	130	48.5	2.8	MERCEDES BENZ/SAF/SCANIA/VOLVO	0119816805/4200003300/14836/1699340	ISO/SKF/SNR/TIMKEN	T2FD060/VKHB2003/HDB026/SET1081
78	32313A	65	140	51	3.49	-	-	ISO/TIMKEN	T2GD065/SET1082
79	32313 BA	65	140	51	3.715	MAN/MERCEDES BENZ	06324990019/0009814118/	ISO	T5GD065
80	32314 A	70	150	54	4.1	BPW/GIGANT/MAN/MERCEDES BENZ	0264102700/10500873/06324990085/0129813205	ISO/SKF/SNR/TIMKEN	T2GD070/VKHB2072/HDB 014/SET1083
81	32314 B	70	150	54	4.51	MAN/MERCEDES BENZ	06324990020/0039812905	ISO/SKF	T5GD070/VKHB2171
82	32316	80	170	61.5	6.2	VOLVO/RENAULT	784715/959532316	ISO/TIMKEN	T2GD080/SET 1084
83	32924	120	165	29	1.77	SAF	4200101000	ISO/SKF/TIMKEN	T2CC120/VKHB2247/SET1085
84	33011	55	90	27	0.67	MERCEDES BENZ	0039814305/0059814405	ISO/SKF/SNR/TIMKEN	T2CE055/VKHB2156/HDB064/SET 1086

RANGE LIST

SR.	SERIES	d (mm)	D (mm)	T (mm)	Weight (Kg.)	BRAND	OEM No.	OTHER MFG.	PART NO.
85	33012	60	95	27	0.7	RENAULT/VOLVO	-	NTN	4T 33012L
86	33013	65	100	27	0.77	RENAULT TRUCKS/VOLVO	5010439190/183766	ISO/SKF/SNR	T2CE065/VKHB2047/HDB055
87	33014	70	110	31	1.08	RENAULT/VOLVO/MERCEDES	50 00 685 837/183 778/005 981 55 05	TIMKEN/SKF	SET1088/VKHB 2044
88	33015	75	115	31	1.18	IVECO/MAN/MERCEDES BENZ	1133049/06324916900/0029819505	ISO/SKF/SNR/TIMKEN	T2CE075/VKHB2046/HDB054/SET1089
89	33018	90	140	39	2.25	RENAULT RVI/RENAULT TRUCKS/VOLVO	5000685839/5516014319/183768	ISO/SKF/SNR/TIMKEN	T2CE090/VKHB2048/HDB056/SET1090
90	33019	95	145	39	2.24	DAF/IVECO/MAN	676987/1104923/06324990123	ISO/SKF/SNR/TIMKEN	T2CE095/VKHB2082/HDB002/SET 1091
91	33020	100	150	39	2.5	MAN/MERCEDES BENZ/SCHMITZ CARGOBUUL	06324990124/0019806602/17063	ISO/SKF/SNR	T2CE100/VKHB2124/HDB013
92	33020 M	100	150	39	2.5	MAN/MERCEDES BENZ/SCHMITZ CARGOBULL	81934200304/0149813205/17063	ISO/SKF/SNR/TIMKEN	T2EC100/VKHB2124/HDB013/SET1092
93	33021 M	105	160	43	2.97	-	-	-	-
94	33021	105	160	43	2.97	FIAT/MAN/MERCEDES BENZ	41800341/06324990096/0039812605	ISO/SKF/SNR/TIMKEN	T2ED105/VKHB2146/HDB008/SET 1093
95	33022	110	170	47	3.85	MAN/MERCEDES BENZ	06324990044/0189817105	ISO/SKF/SNR/TIMKEN	T2DE110/VKHB2163/HDB007/SET 1094
96	33024	120	180	48	4.168	NISSAN	-	SKF	331324
97	33111	55	95	30	0.88	IVECO/MERCEDES BENZ/ZF	7160360/0069818205/0635376002	ISO/SKF/SNR/TIMKEN	T3CE055/VKHB2059/HDB058/SET1098
98	33112	60	100	30	0.94	MERCEDES	008 981 95 05	ISO/SKF/TIMKEN	T3CE060/VKHB 2233/SET 1099
99	33113	65	110	34	1.28	IVECO/MAN/MERCEDES BENZ	4690299/06324990039/0039814105	ISO/SKF/SNR/TIMKEN	T3DE065/VKHB2159/HDB004/SET1100
100	33114	70	120	37	1.7	MERCEDES BENZ/RENAULT TRUCKS	0029819705/5010534744	ISO	T3DE070
101	33115	75	125	37	1.731	DAF/MAN/MERCEDES BENZ/VOLVO	221664/81934200270/0009814218/184678	ISO/SKF/SNR/TIMKEN	T3DE075/VKHB2222/HDB077/SET1101
102	33116	80	130	37	1.818	BPW/DAF	0264088000/836586	ISO/SKF	T3DE080/VKHB 2326
103	33117	85	140	41	2.5	GIGANT/IVECO/MERCEDES BENZ	10500574/7164196/0059818305	ISO/SKF/SNR/TIMKEN	T3DE085/VKHB2158/HDB018/SET1103
104	33118	90	150	45	3.03	BPW/GIGANT/IVECO/SCHMITZ CARGOBULL	0264089000/10500582/42103253/14440	ISO/SKF/TIMKEN	T3DE090/VKHB2178/SET 1104
105	33207	35	72	28	0.51	IVECO/MAN/MERCEDES BENZ	7169935/06324890039/0149810605	ISO/SKF/SNR/TIMKEN	T2DE035/VKHB2182/HDB070/SET1107
106	33210	50	90	32	0.837	MAN/MERCEDES BENZ/RENAULT TRUCKS	81934200072/0119817605/5000669957	ISO/SKF/SNR/TIMKEN	T3DE050/VKHB2068/HDB062/SET1110
107	33211	55	100	35	1.2	IVECO/MERCEDES BENZ/SAF	1905236/0049816405/4200005800	ISO/SKF/SNR/TIMKEN	T3DE055/VKHB2061/HDB011/SET1111
108	33212	60	110	38	1.498	IVECO/MAN/RENAULT TRUCKS	7160361/06324890045/0023336081	ISO/SKF/SNR/TIMKEN	T3EE060/VKHB2173/HDB068/SET1112
109	33213	65	120	41	1.903	BPE/GIGANT	0264076500/10500558	ISO/SKF/SNR/TIMKEN	T3EE065/VKHB2051/HDB022/SET1113
110	33214	70	125	41	2.044	MERCEDES BENZ/RENAULT TRUCKS	000720033214/5010439064	ISO/SKF/SNR/TIMKEN	T3EE070/VKHB2066/HDB060/SET1114
111	33215	75	130	41	2.27	BPW/GIGANT/IVECO/SCANIA	0264102900/10500858/7175254/260998	ISO/SKF/SNR/TIMKEN	T3EE075/VKHB2028/HDB010/SET1115
112	33216	80	140	46	2.851	RENAULT TRUCKS/VOLVO/ZF	5010587008/20723502/5841300574	ISO/SKF/SNR/TIMKEN	T3EE080/VKHB2232/HDB074/SET 1116

RANGE LIST

SR.	SERIES	d (mm)	D (mm)	T (mm)	Weight (Kg.)	BRAND	OEM No.	OTHER MFG.	PART NO.
113	33216 M	80	140	46	2.851	-	-	-	-
114	33217	85	150	49	3.7	BPW/MAN/MERCEDES BENZ	0264078500/06324990193/0079817005	ISO/SKF/SNR/TIMKEN	T3EE085/VKHB2225/HDB078/SET1117
115	33220	100	180	63	6.725	MAN/MERCEDES BENZ	06324990046/0089813405	ISO/SKF/TIMKEN	T3FE100/VKHB2165/SET1309
116	1680/20	33.338	66.675	20.638	0.304	-	-	-	-
117	201032	75	145	53	3.775	DAF	0275825/1327603	SKF	VKHB2231/T3FE075QVB481
118	201047/11	45	95	36	1.195	-	-	FAG/ISO/SKF/TIMKEN	201047/T2ED045/VKHB2184/SET1297
119	204043/10	39.987	90.975	32	1	MERCEDES BENZ	89812805	TIMKEN	SET 1150
120	207049/10	55	95	29	0.815	-	-	ISO/TIMKEN	T2DD055/SET 1176
121	212047/11	63.5	122.238	38.1	1.96	-	-	TIMKEN	SETT 412
122	212049/10	66.675	122.238	38.1	1.84	MERCEDES,DAF,IVECO,RENAULT	-	TIMKEN	SET 1152
123	215249/10	75.987	131.975	39	2.083	SAF/VOLVO	04200100700/183348	SKF/TIMKEN	VKHB2050/SET 113
124	218248/10	89.974	146.975	40	2.515	MERITOR/RENAULT TRUCKS/SAF	99041035B/0023336108/04200100600	SKF/SNR/TIMKEN	VKHB2029/HDB023/SET 414
125	220149/10	99.975	156.975	42	2.842	SCANIA/VOLVO	1342706/183326	FAG/SKF/TIMKEN	805248/VKHB2053/SET 317
126	221449/10	101.6	190.5	57.15	702	-	-	-	-
127	225749/10	127	165.895	18.258	0.92	-	-	-	-
128	236749/10	184.15	234.95	34	3.39	-	-	-	-
129	25590/20	45.618	82.931	23.812	0.529	VOLVO	181113/183133	SKF/TIMKEN	VKHB2309/SET 54
130	25590/23	45.618	82.931	26.988	0.575	-	-	TIMKEN	SET 55
131	27687/20	82.55	125.412	25.4	1.053	DAF	218316	TIMKEN	SET262
132	28680/22	55.56	97.63	24.6	0.75	MASSEY	831340M1	SKF	BR28682
133	28682/22	57.15	97.63	24.608	0.717	AGRALE	4001035053002/	TIMKEN	SET 407
134	28985/20	60.325	101.6	25.4	0.79	MERCEDES BENZ	19816005	-	-
135	29585/20	63.5	107.95	25.4	0.927	NSN	-	NSN	705475
136	29586/20	63.5	107.95	25.4	0.833	-	-	-	-
137	29586/22	63.5	107.95	25.4	0.833	ISUZU	9-00093-624-0	-	-
138	29590/20	66.675	107.95	25.4	0.833	-	-	-	-
139	29685/20	73.025	112.712	25.4	0.859	-	-	TIMKEN	SET 267
140	31594/20	34.925	76.2	29.37	0.62	MERCEDES BENZ	129810605	TIMKEN	SET 57

RANGE LIST

SR.	SERIES	d (mm)	D (mm)	T (mm)	Weight (Kg.)	BRAND	OEM No.	OTHER MFG.	PART NO.
141	319349/10	95.25	128.587	15.875	0.53	-	-	-	-
142	32015 X	75	115	25	0.872	FIAT/IVECO/MAN	1102042/1905219/81934200157	ISO/SKF/SNR/TIMKEN	T4CC075/VKHB2282/HDB086/SET1045
143	331958	88	140	32	1.778	-	-	FAG/SKF	529065/331958 Q
144	331974	106	160	35	2.43	-	-	-	-
145	3386/3320	39.688	80.167	29.37	0.651	-	-	-	-
146	3386/25	39.688	79.974	29.37	0.675	-	-	-	-
147	3188/20	31.75	72.626	30.162	0.593	-	-	-	-
148	33895/20	53.975	95.25	27.783	0.84	-	-	-	-
149	33895/22	53.975	95.25	27.783	0.776	MERCEDES BENZ	19810505	SKF/TEMKAN	VKHB2075/SET272
150	34306/34487	77.788	121.442	24.608	0.893	IVECO/ZF	1905220/0735370165		
151	3585/25	41.275	87.312	30.162	0.812	-	-	SKF/TEMKAN	VKHB 2089/SET 102
152	368/63D	50.8	90	50	0.58	-	-	-	-
153	37425/625	107.95	158.75	23.02	1.33	TAFE/ESCORT TRACTOR		-	-
154	37431/25	109.538	158.75	23.02	1.289	-	-	TIMKEN	SET 1122/SET 364
155	3782/20	44.45	93.264	30.162	0.94	EATON/MERCEDES BENZ	660181/0019818380	TIMKEN	SET 406
156	3872/20	38	72.02	36	0.565	-	-	KOYO/NATIONAL	DAC3872W 8CS81/510007
157	3780/20	50.8	93.264	30.162	0.829	AGRALE	4001035098007/	SKF/TEMKAN	VKHB 2310/SET 123
158	387A/82	57.15	98.425	21	0.612	-	-	SKF/TEMKAN	VKHB 2276/SET 1123
159	387AS/82	57.15	96.838	25.4	0.635	-	-	TIMKEN	SET 76
160	388/82	57.531	98.425	21	0.62	-	-	TIMKEN	SET 77
161	390/94A	63.5	114.673	22	0.926	-	-	-	-
162	390A/94A	63.5	110	22	0.9	-	-	-	-
163	395/94A	63.5	110	22	0.812	-	-	-	-
164	39580/20	57.15	112.712	30.162	1.361	VOLVO	184088/20428192	SKF/TEMKAN	VKHB 2036/SET 276
165	39581/20	57.15	112.712	30.162	1.361	DAF	1400075	SKF/TEMKAN	VKHB 2088/SET 278
166	39590/20	66.675	112.712	30.162	1.144	AGRALE/EATON/MAN/MERCEDES BENZ	4001035055007/675250/81934200163/0019818080	SKF/TEMKAN	VKHB 2175/SET 408
167	395A/94A	66.675	110	22	0.757	-	-	TIMKEN	SET 365
168	3984/20	66.675	112.712	30.162	1.141	-	-	-	-

RANGE LIST

SR.	SERIES	d (mm)	D (mm)	T (mm)	Weight (Kg.)	BRAND	OEM No.	OTHER MFG.	PART NO.
169	3975/26	50.8	112.712	33.338	0.555	SCANIA	1548818/1883975	SKF	VKT 8644
170	399AS/94	68.262	110	22	0.728	-	-	-	-
171	408215	90	140	23.75	1.3	-	-	-	-
172	41125/286	28.575	72.626	24.608	0.46	-	-	-	-
173	415647/10	75	145	51	3.74	-	-	-	-
174	421246/10	98.425	184.15	63.5	7.26	-	-	-	-
175	45282/20	47.625	104.775	30.162	1.18	-	-	-	-
176	45284/20	50.8	104.775	30.162	1.194	-	-	TIMKEN	SET410
177	45285/20	50.8	104.775	30.162	1.21	EATON/MERCEDES BENZ	711123/0139810105	-	-
178	462/53	57.15	104.775	30.162	1.028	-	-	-	-
179	469/53	57.15	104.775	30.162	1.028	VOLVO	18416	TIMKEN	SET 205
180	497/493	85.725	136.525	30.162	1.496	MAN/SCANIA/VOLVO	81934200327/174949/181048	TIMKEN	SET 68
181	497A/492A	85.725	133.35	30.162	1.446	-	-	-	-
182	498/492A	84.138	133.35	30.162	1.431	-	-	-	-
183	47487/20	69.85	120	32.545	1.46	MERCEDES BENZ	29812605	SKF	VKHB 2200
184	47490/20	71.438	120	32.545	1.41	MAN/MERCEDES BENZ/ZF	81934200272/0029819202/0750120290	TIMKEN	SET 928
185	480/72	68.262	120	29.794	1.31	-	-	-	-
186	482/72	69.85	120	29.795	1.267	SCANIA	284992		
187	48290/20	127	182.562	39.689	3.26	-	-	TIMKEN	SET 111
188	48393/48320	136.525	190.5	39.688	3.332	-	-	-	-
189	49585	50.8	101.6	31.75	1.101	-	-	-	-
190	503349/10	45.987	74.976	18	0.294	MERCEDES BENZ/ZF	0009808202/0501304461	-	-
191	515649/10	80	130	35	1.693	IVECO/SAF/TRAILOR	7160953/04200005100/6015000 D	FAG/ISO/SKF	524850/T3DD080/VKHB 2412 S
192	516849/10	85	140	39	2.185	SCANIA	1408149/2124235	ISO	T3DD085
193	518713	44.65	112.712	34.512	1.6	EATON/MERCEDES BENZ	3316002/0029818705	FAG/SKF	518713/331264
194	518445	88.9	152.4	39.688	2.774	FRUEHAUF	AJA0813001	SKF/SNR/TIMKEN	VKHB 2227/HDB024/SET 415
195	522380	50.8	100	35	1.18	IVECO/MAN/MERCEDES BENZ/VOLVO	42492259/81934200132/0019801402/1526724	FAG/SKF/TIMKEN	522380(33211)/VKT 8886/XGA 33211
196	522649	110	180	47	4.54	SCANIA	1309568	TIMKEN	SET 323

RANGE LIST

SR.	SERIES	d (mm)	D (mm)	T (mm)	Weight (Kg.)	BRAND	OEM No.	OTHER MFG.	PART NO.
197	524850	80	130	35	1.693	IVECO/SAF/TRAILOR	7160953/04200005100/6015000 D	FAG/ISO/SKF	524850/T3DD080/VKHB 2205
198	524851	90	145	35	2.08	RENAULT TRUCKS/SAF/TRAILOR	5010241094/4200005000/6014000 F	FAG/ISO/SKF	524851 A/T4DC090A/VKHB 2226
199	528946	105	170	38	3.25	MERCEDES BENZ	79810305	FAG/SKF	528946/331126 Q
200	528983	70	130	57	2.69	DAF/MAN	260204/06324990043	FAG/SKF/TIMKEN	528983/331933/SET 1300
201	529065	88	140	32	1.778	-	-	FAG/SKF	529065/331958 Q
202	53178	44.45	95.25	30.958	0.899	VOLVO	6889595		
203	534565	70	130	57	2.69	KASSBOHRER/MERCEDES BENZ	6691383000/0059813105	FAG/SKF/TIMKEN	534565/VKHB2071/SET 1301
204	538971	70	130	43	2.332	SCANIA/VOLVO	322748/1584340	FAG/ISO/SKF/TIMKEN	538971/T2ED070A/VKHB2024/SET1165
205	539090	65	160	37.5	4.095	-	-	-	-
206	540106	60	130	31	2.16	MAN/MERCEDES BENZ/VOLVO/ZF	81934200129/0019807902/1526658/0750118153	FAG/SKF	540106/635245
207	540849	68.262	115	30.162	1.25	-	-	-	-
208	543562	75	180	63.5	7.77	MAN/SCANIA	06324990128/315465	FAG/SKF	543562/VKT8776
209	546439	70	165	57	5.9	-	-	-	-
210	543805	38.1	90	35.25	1.1	VOLVO	1588222	FAG	543805
211	55187/443	47.625	111.125	30.162	1.385	MAN	81935010101		
212	55200	50.8	111.125	30.162	1.335	IVECO/MAN/MERITOR	7142397/81935010101/98076	TIMKEN	SET 293
213	55206	52.388	111.125	30.162	0.86	MAN/MERITOR	81935010101/98074		
214	5583/35	63.5	122.238	43.658	2.408	-	-	-	-
215	50 KW	50	93.264	30.162	0.83	-	-	KBC/NSK	3780 F1/50KW01
216	501349/11	41.275	73.431	19.558	0.326	MERCEDES BENZ/SCANIA/ZF	0019806202/870439/0750117323	SKF/TIMKEN	VKHB 2153/SET 45
217	509033	65	145	36	2.52	-	-	-	-
218	522549/10	109.987	159.987	34.925	4.71	-	-	-	-
219	522549/10 D	109.987	159.987	74.612	-	-	-	-	-
220	527/22	44.45	101.6	34.925	1.272			TIMKEN	SET 210
221	529/522X	50.8	101.6	34.925	1.202	-	-	-	-
222	533349/10	165.1	231.976	45	-	-	-	-	-
223	535/32	44.45	111.125	39.1	1.86	-	-	-	-
224	537/32	50.8	107.95	36.512	1.497	VOLVO	184425/181402	TIMKEN	SET 212

RANGE LIST

SR.	SERIES	d (mm)	D (mm)	T (mm)	Weight (Kg.)	BRAND	OEM No.	OTHER MFG.	PART NO.
225	539/32	53.975	111.125	38.1	1.615	-	-	-	-
226	5395/35	49.212	103.188	43.658	1.3	DAF/IVECO/MAN	1818257/7982090/81934200187	TIMKEN	SET 1133
227	565/62	63.5	130	36.512	1.94	-	-	-	-
228	566/63	69.85	127	36.512	1.87	-	-	-	-
229	567/63	73.025	127	36.512	1.806	IVECO	354821	SKF/TIMKEN	VKHB 2208/SET 425
230	566283	99.8	148	135	6	DAF	1801594	FAG	566283.H195
231	566425	93.8	148	135	6.05	RENAULT TRUCKS/SCANIA/VOLVO	7420819860/2277946/21036050	FAG/SKF/TIMKEN	566425.H195/VKBA5423/SET 1314
232	566425 FK	93.8	148	135	6.05	RENAULT TRUCKS/SCANIA/VOLVO	7420819860/2277946/21036050	FAG/SKF/TIMKEN	800792 D /VKBA5423/SET 1314
233	566426	68	125	115	4.49	RENAULT TRUCKS/VOLVO	7420518637/3988674	FAG/SKF/TIMKEN	566426.H195/VKBA5425/SET 1312
234	566426 FK	68	125	115	4.49	RENAULT TRUCKS/VOLVO	7420518637/3988674	FAG/SKF/TIMKEN	581079 C/VKBA5425/SET 1312
235	566427	57.8	110	115	3.7	RENAULT TRCKS/VOLVO	7420518617/20967830	FAG/SKF/TIMKEN	566427.H195/VKBA5424/SET 1311
236	566427 FK	57.8	110	115	3.7	RENAULT TRCKS/VOLVO	7420518617/20967830	FAG/SKF/TIMKEN	566427.H195/VKBA5424/SET 1311
237	566074	69.8	125	114	4.86	DAF	1801592	FAG	566074.H195
238	566834	69.8	119.7	110.5	4.36	DAF	1391615	FAG/TIMKEN	566883.H195/SET 1351
239	568/63	73.817	127	36.512	1.76	-	-	-	-
240	567171	50	150	50	4	-	-	-	-
241	568879	78	130	135	-	-	-	-	-
242	575/572	76.2	139.992	36.512	2.318	-	-	TIMKEN	SET 1135
243	578/572	79.985	139.992	36.098	2	-	-	-	-
244	572813	70	150	64	4.8	MERCEDES BENZ/VOLVO	0139814305/3098132	FAG/SKF	572813/VKHB2280(BT10084)
245	575725	65	165	40	3.855	MERCEDES BENZ	69813505	FAG	575725.F51
246	580616	75	140	34.25	2.27	MERCEDES BENZ	0089812605/0159818405	FAG	580616.TR1
247	580989	38	94	31.5	1.165	SCANIA	1331313/1746781	FAG	580989
248	581079	68	125	115	4.49	RENAULT TRCKS/VOLVO	7420518637/21021391	FAG/SKF/TIMKEN	581079 C/VKBA5425/SET 1312
249	580/572X	82.55	139.7	36.512	2.083	-	-	TIMKEN	SET 1137
250	580/572	82.55	139.992	36.512	2.1	MRECEDES BENZ/MERITOR/VOLVO	0049814805/098223/181299	SKF/TIMKEN	VKHB2041/SET 401
251	593/592A	88.9	152.4	39.688	2.3	-	-	-	-
252	594A/592A	95.25	152.4	39.688	2.45	-	-	TIMKEN	SET 1138/SET 403

RANGE LIST

SR.	SERIES	d (mm)	D (mm)	T (mm)	Weight (Kg.)	BRAND	OEM No.	OTHER MFG.	PART NO.
253	598/592	92.075	152.4	39.688	2.625	-	-	-	-
254	603049	45.242	77.788	21.43	0.38	-	-	TIMKEN	SET 36
255	612949	70	115	29	1.085	MAN/ZF/VOLVO	81934200261/0735370728/183418	ISO/TIMKEN	T4DC070/SET 1180
256	613449/10	69.85	112.712	22.225	0.8	-	-	-	-
257	6379/20	65.088	135.755	53.975	3.5	-	-	SKF/TIMKEN	VKHB 2195/SET 110
258	6386/20	66.675	135.755	53.975	3.435	IVECO/VOLVO	4540025/181337	SKF/TIMKEN	VKHB 2013/SET 241
259	65237/500	60.325	127	44.45	2.5	VOLVO	20508274		
260	663/53	82.55	146.05	41.275	2.669	DAF/VOLVO	174592/184794	SKF/TIMKEN	VKHB 2043/SET 405
261	665/53	85.725	146.05	41.275	2.68	-	-	-	-
262	66200/462	50.8	117.475	33.338	-	-	-	-	-
263	64450/64700	114.3	177.8	41.275	3.453	IVECO/MERITOR/RENAULT/VOLVO	8194960/98538/5010534616/8124141	TIMKEN	SET 117
264	681/72	92.075	168.275	41.275	3.75	-	-	-	-
265	683/72	95.25	168.275	41.275	3.6	RENAULT TRUCKS/VOLVO	0023336006/184795	SKF/TIMKEN	VKHB 2042/SET 109
266	685/72	98.425	168.275	41.275	3.52	-	-	-	-
267	687/72	101.6	168.275	41.275	3.286	DAF/VOLVO	260724/181596(184637)	SKF/TIMKEN	VKHB 2143/SET 508
268	68462/712	117.475	180.975	34.925	2.745	-	-	-	-
269	704649/10	50	84	22	0.45	-	-	-	-
270	710949/10	65	105	24	0.736	ZF	0750117210/0750117892	ISO/TIMKEN	T4CD065/SET 342
271	714149/10	75	115	25	0.853	IVECO/MERITOR/RENAULT TRUCKS	7149607/98353/5010443768	ISO/SKF/TIMKEN	T4CC075/VKHB2338/SET 324
272	714249/10	75	120	31	1.25	IVECO/MERCEDES BENZ	7166346/0009807902	FAG/ISO/SKF	201009/T4CD075/VKHB 2137
273	716649/10	85	130	30	1.335	DAF/IVECO/MERITOR	622102/1905392/98144	TIMKEN	SET 361
274	720249/10	100	155	36	2.31	SCANIA	1105776	ISO	T4DC100
275	72212/487	53.975	123.825	36.512	1.868	-	-	-	-
276	74550/851CD	139.7	215.9	106.362	12.616	-	-	-	-
277	740/42	80.962	150.089	44.45	3.321	-	-	TIMKEN	SET 927
278	744/42	73.025	150	44.45	3.75	-	-	-	-
279	748S/42	76.2	150.089	44.45	3.62	-	-	-	-
280	749/42	85.026	150.089	44.45	3.129	-	-	-	-

RANGE LIST

SR.	SERIES	d (mm)	D (mm)	T (mm)	Weight (Kg.)	BRAND	OEM No.	OTHER MFG.	PART NO.
281	77213	65	145	39.5	-	-	-	-	-
282	7821E	105	170	57	5.72	-	-	-	-
283	78225 C	57.15	140.03	36.513	2.65	DAF/IVECO/MERITOR	0325334/7142356/98361	-	-
284	78250	63.5	140.03	36.512	2.47	FIAT	70932955	-	-
285	78551	53.975	140.03	36.512	2.75	DAF	613NK78551	SKF	78551
286	800308	120	165	123	4.62	SAF	4200101500	FAG	579065D
287	800792	93.8	148	135	6.05	RENAULT TRUCKS/SCANIA/VOLVO	5001861915/2277946/20518661	FAG/SKF/TIMKEN	566425.H195/VKBA5423/SET1314
288	801400	80	165	57	5.83	MAN/MERCEDES BENZ	06324990192/0149812205	FAG	801400
289	801464	60	130	35.25	2.755	MERCEDES BENZ	189816805	FAG	563007/801464
290	801785	70	150	74	5.77	MERCEDES BENZ	0139811405/0139813905	SKF	VKHB 2307
291	801794 B	65	152	48	4.488	MERCEDES BENZ	0149812005/0149812105	FAG	801794 B
292	801974HUB	70	196	130	14.6	IVECO/MAN	42541578/81934200288	FAG/SKF	801974AE.H195/BTF0110(VKBA5377)
293	803194	78	130	90	4.46	MERCEDES	0139812205	SKF/FERSA	VKBA 5415/F15125
294	803750	105	160	140	6.89	IVECO/MAN/VOLVO	503126457/36934200009/85110616	FAG/SKF	803750 B/VKBA 5408
295	803904	120	175	123	6.45	SAF	03434301200	FAG	566830.H195
296	804049	47.625	88.9	25.4	0.66	RENAULT	-	-	-
297	804162	110	170	146	8.53	MAN	81934200346/	FAG/SKF	804162 A/VKBA 5416
298	804358	80	140	39.25	2.5	-	-	FAG/TIMKEN	804358/NP 086391
299	804840/10	41.275	95.25	30.162	1.06	-	-	-	-
300	804846/10	47.625	95.25	30.162	0.96	MERITOR	9828998084	-	-
301	805011 C	82	140	110	6.595	IVECO/VOLVO	2994058/85103258	FAG/SKF/TIMKEN	805011 C/VKBA5409/SET 1277
302	805015	70	165	57	6.35	MERCEDES BENZ	149814905	FAG/SKF	805015(801400)/BT1 0132
303	805046	60	130	33.25	2.365	MERCEDES BBENZ	0089812705/0089813005	FAG	805046/801464
304	805051	70	124.9	110	4.15	DAF	1391617	FAG	70-91615
305	805092 C	78	130	90.5	4.345	IVECO/MAN/VOLVO	7182915/81934206099/85103257	FAG	805092 C
306	805165 A &C	57.8	110	115	3.3	VOLVO	20367196/20367197/20392010	SKF	VKBA 5407
307	805312	100	160	44	3.24	MERCEDES BENZ	159814705	FERSA	F 25267
308	805415	82	138	110	5.2	SAF	3307303000/3307303001	FAG	569868.H195

RANGE LIST

SR.	SERIES	d (mm)	D (mm)	T (mm)	Weight (Kg.)	BRAND	OEM No.	OTHER MFG.	PART NO.
309	805415 HUB	82	196	110	15.3	SAF	3434365000/3434301800	SKF	VKBA 5549/BTF 0056
310	805531	60	110	100	3.2	RENAULT/VOLVO	20367196/20392010	FAG	805532
311	805532 HUB	60	168	102	8.71	RENAULT/VOLVO	20550678/5010587029	SKF	BTF 068/VKBA 5407
312	805958	70	124.7	122	4.112	DAF	-	FAG	566864.H195
313	806649/10	53.975	88.9	19.05	0.29	MERCEDES BENZ	0009801902/	TIMKEN	SET 1227
314	805937	70	150	50	4.112	-	-	-	-
315	807046	50.8	104.775	36.512	1.441	VOLVO	-	-	-
316	807048/10	54.487	104.775	36.512	1.471	MAN/MERCEDES BENZ	06324990071/0059814605	TIMKEN	SET 1158
317	807049/10	53.975	104.775	36.512	1.39	-	-	-	-
318	807813 A	65	110	30.5	1.1	-	-	-	-
319	808918	88	138	110	4.2	SAF	3434302000	FAG	570530.H195
320	88649/10	34.925	72.233	25.4	0.48	ZF	750117205	TIMKEN	SET 67
321	813843/10	61.912	127	36.512	2.13	-	-	-	-
322	814849/10	77.788	117.475	25.4	0.9	-	-	-	-
323	819349/10	95	135	20	0.829	ZF	750117062	TIMKEN	SET 336
324	822049/10	110	165	35	2.434	-	-	-	-
325	88542/11	31.75	73.025	29.37	0.63	VOLVO	183644/183645	TIMKEN	SET 81
326	88540/13	30	72	29.37	0.6	-	-	-	-
327	88547/10	33.338	73.025	29.37	0.609	-	-	-	-
328	842/832	82.55	168.275	53.975	5.6	-	-	-	-
329	903249	44.45	95.25	30.958	0.954	-	-	TIMKEN	SET 64
330	90381/744	96.838	188.912	50.8	5.7	-	-	-	-
331	913842/10	61.912	146.05	41.275	2.85	SCANIA/VOLVO	1911809/184634	SKF/TIMKEN	VKT 8627/SET 340
332	913843/10	61.912	146.05	41.275	3.087	VOLVO	184635	SKF/TIMKEN	VKT 8750/SET 341
333	913849/10	69.85	146.05	41.275	2.85	SCANIA	1301683	-	-
334	936/32	107.95	212.725	66.675	10	-	-	-	-
335	938/32	114.3	212.725	66.675	9.42	-	-	-	-
336	941/32	66.675	136.525	41.275	9.4	-	-	-	-

RANGE LIST

SR.	SERIES	d (mm)	D (mm)	T (mm)	Weight (Kg.)	BRAND	OEM No.	OTHER MFG.	PART NO.
337	943/32	98.425	212.725	66.675	11.1	-	-	-	-
338	98400/789 D	101.6	200.025	52.761	14.309	-	-	-	-
339	98350	88.9	200	52.761	7.55	-	-	-	-
340	TLC 59/5	100	180	82	10.3	-	-	-	-
341	102949/10	45.242	73.431	19.558	0.3	-	-	TIMKEN	SET 47
342	104948/10	50	82	21.5	0.41	VOLVO	183430	ISO/TIMKEN	T2CC050/SET 107
343	104949/10	50.8	82	21.976	0.406	VOLVO	85104619	TIMKEN	SET 82
344	104949/12	50.8	82.931	21.59	0.417	-	-	-	-
345	534176	110	180		7.6	-	-	-	-
346	14138/276	34.925	69.012	19.845	0.323	-	-	-	-
347	BC1B 320308	45	100	31	1.19	IVECO/MERITOR/RENAULT TRCKS/VOLVO	1905316/98509/5001859173/20366533	SKF	BC1B 320308 A
348	BC1B 326120	40	97	30	1.06	-	-	-	-
349	BLAB 366485C	95	145	37	2.35	MAN	6369590030	SKF	BSFB 145
350	BT1 0381/Q	28	67	30.65	0.5	-	-	-	-
351	BT1 00500/Q	68.25	143	42.4	-	TATA	-	-	-
352	BT1 0501/Q	50	114.3	44.5	-	TATA	-	-	-
353	BT1 0084	70	150	64	4.8	MERCEDES BENZ/VOLVO	009 981 0805/3098132	FAG/SKF	572813/VKHB2280(BT10084)
354	BT1 0097 C	40	90	28.75	0.955	VOLVO	3173772	SKF	BT1 0097 C
355	BT1 0163	82	140	36.5	2.1	MERITOR	99041075	SKF/TIMKEN	BT1 0163/NP 569484
356	BT1B 328251/Q	55	100	40	1.13	MAN	06.32489.0072/06 32489 0073	SKF	VKHB 2240
357	BT1B 328406	65	150	38	3.14	SCANIA	1327878	FAG/SKF	568980/BT1B 328406 A(30314)
358	BT2B 441026	55	100	56	1.72	MAN	06.32489.0072/06 32489 0073	SKF	VKBA 804
359	BTH 018	68	127	115	6.15	SCANIA	1413785/1868087	FAG/SKF/TIMKEN	201037/BTH 0018 A/SET 1231
360	BTH 022	82	140	57.5	6.45	MERCEDES BENZ	0149815105/0179815005	FAG/SKF/SNR	201034/BTH 0022/HDS 103
361	BTH 025	90	160	125	10.4	IVECO	7183074/7189050	SKF	VKBA 5397/BTH 0053
362	BTH 1011	55	90	60	1.4	IVECO	7180066	SKF	BTH 1011(VKBA 3552)
363	BTH 1011 HUB	55	133	78	4.675	IVECO	504166117	FAG	71369830
364	BTHB 329129DE	49	84	48	1.02	OPEL/RENAULT	9161454/7701205416	SKF	BTHB 329129 ABC

RANGE LIST

SR.	SERIES	d (mm)	D (mm)	T (mm)	Weight (Kg.)	BRAND	OEM No.	OTHER MFG.	PART NO.
365	CIR 0805	39.688	0	40.386	0.705	MERCEDES BENZ	0139811505/0139812705	NTN	ECO CIR 0805.2
366	CIR 1010	50	0	41.275	1.178	MERCEDES BENZ	0139810905/0159816105	NTN	ETA CIR 1010 1
367	CIR 1104	55	0	29.8	0.701	MERCEDES BENZ	0119811905/0179812205	NTN	ETA CIR 1104
368	CIR 1008	50	83	20.5	0.415	-	-	KOYO	TR 1008 02
369	ETA 4367V8	39.688	0	40.386	0.815	MERCEDES BENZ	0119815205/0129818205	-	-
370	DU 60108	60	108	75	2.835	MERCEDES BENZ	159811905	FAG/KOYO	201050/DU 60108 8
371	HUR 040 HUB	70	194	112	10	RENAULT	5010439770	SKF	BTF 0045
372	HUR 065 HUB	65	114	110	-	RENAULT	5010216920/7420879770	FAG/SKF	201044/VKBA 5308/BTF 0034
373	JD 6549/10	65	110	31	1.15	SCANIA	1548056/392996	ISO/SKF/TIMKEN	T2DD065/VKT 8721/SET 243
374	JF 4049/10	40	85	33	0.859	DAF/IVECO/MAN/SCANIA	1198033/1905366/81934200273/1548817	ISO/TIMKEN	T2EE040/SET 238
375	JF 9549/10	95	160	46	3.76	DODGE/RENAULT TRUCKS	785895/5010439571	FAG/ISO/SKF/TIMKEN	201029/T2ED095/VKHB2192/SET 1166
376	JP 12049/10	120	170	27	1.66	MERITOR	7142391/98377	ISO	T4CB 120
377	JP 13049/10	130	185	29	2.17	-	-	ISO	T4CB 130
378	JP-10049/10	100	145	24	0.902	-	-	ISO	T4CB 100
379	JP-14049/10	140	195	29	2.5	-	-	-	-
380	JP 16049/10	160	220	32	3.17	-	-	-	-
381	JT 9049/10	90	150	42	2.89	RENAULT	5010587009	FAG/TIMKEN/SKF	20109/JT 9049-9X029/VKHB 2337
382	JW 4549/10	45	95	29	0.895	MAN	81 93420 0165	ISO	T7FC045
383	JW 5049/10	50	105	32	1.41	IVECO	1905215	ISO/TIMKEN	T7FC050/SET 240
384	JW 5549/10	55	115	35	1.555	-	-	-	T7FC055/SET 1192
385	JW 6049/10	60	125	37	2.02	IVECO/SCANIA/ZF	1905345/1408193/0750117003	ISO/TIMKEN	T7FC 060/SET 1193
386	JW 6549/10	65	130	37	2.09	-	-	-	-
387	JW 7049/10	70	140	39	2.594	VOLVO	184671	ISO/SKF	T7FC070/VKT 8631
388	JW 7549/10	75	150	42	3.14	-	-	-	-
389	JW 8049/10	80	160	45	4	-	-	ISO	T7FC080
390	JW 8549/10	85	170	48	4.83	-	-	-	-
391	JW 9049/10	90	175	48	4.959	-	-	-	-
392	JW 9549/10	95	160	46	3.76	DODGE/RENAULT TRUCKS	785895/5000785895	FAG/ISO/SKF/TIMKEN	201029/T2ED095/VKHB2192/SET1166

RANGE LIST

SR.	SERIES	d (mm)	D (mm)	T (mm)	Weight (Kg.)	BRAND	OEM No.	OTHER MFG.	PART NO.
393	NUP 310 K	50	110	27	1.2	-	-	-	-
394	NA 4924	120	165	45	2.86	-	-	-	-
395	T 1380	22.225	52.388	19.368	0.198	-	-	SKF/TIMKEN	VKHB 2055/SET 226
396	T2 ED 065	65	120	39	1.799	-	-	ISO/SKF	T2ED065/VKHB2287
397	T2 ED 050	50	100	36	1.293	FIAT/SCANIA	7169934/1534829	ISO/SKF/TIMKEN	T2ED050/VKT 8625/SET 1296
398	T2 EE 040	40	85	33	0.859	DAF/IVECO/MAN	1198033/1905366/81934200273	ISO/TIMKEN	T2EE040/SET 238
399	T2 ED 060	60	115	40	1.835	RENAULT TRUCKS/SCANIA/VOLVO	7421660722/392039/1654320	FAG/ISO/SKF	568968/T2EE060/VKHB2228
400	T2ED 100/Q	100	165	47	3.845	DAF/MAN/SCANIA	266487/06 32499 0153/383343	FAG/SKF/TIMKEN	T2EE100/VKHB 2147/SET 1308
401	T2ED 055	55	110	39	1.68	SCANIA	-	-	-
402	T5ED 080	80	140	42	3.23	-	-	-	-
403	T5 ED 100	100	160	42	3.13	DAF	0658448/658448	FAG	T5ED100.576376
404	W 220	120	215	80	12.99	-	-	FAG	804312A
405	TB 1009	35	101.3	28.5	-	-	-	-	-
406	TB 1011	55	119	34	-	-	-	-	-

BHP™

BEARINGS

An ISO 9001:2008 Certified Company

Volkswagen | SCANIA | MAN | IVECO

SAF Holland — Engineering Your Road to Success | HINO | VOLVO | DAF

Mercedes-Benz | NISSAN | RENAULT | ISUZU

TURNO TECH®

Auto Engineering Pvt. Ltd.

Mfg.: ALL TYPE OF BEARING

Survey No. 204/3, Plot No. 11/12, S.I.D.C. Main Road,
VERAVAL (Shapar), Ta.: Kotada Sangani, Dist.: Rajkot. (Guj.) INDIA
Ph.: +91-2827-252061, Fax : +91-2827-253861
Mobile : +91-9925000825, +91-89055 22218
E-mail : info@turnotechauto.in, bhpbearing@gmail.com
skype : bhpbearing

TÜV SÜD ISO 9001

An ISO 9001:2008
Certified Company