RADADIYA INDUSTRIES

MFG. :- ALL TYPE OF CNC TURNING MACHINE

AN ISO 9001 : 2008 CERTIFIED COMPANY

TECHNICAL SPECIFICATION

CNC FLAT BED TURNING MACHINE

		Ri 200A	Ri 300A	Ri 300B	Ri 400A	Ri 400B	Ri 500A	Ri 500SPM
System		**Siemens / Fanuc**						
		Capacity						
Chuck Size	mm	200	250	250	315	315	315	As Per Client Requirement
Standard Turning Diameter	mm	200	300	300	400	400	500	
Maximum Turning Diameter	mm	350	400	400	500	500	600	
Maximum Turning Length	mm	500	500	900	500	900	700	
Max. Job Swingover Dia.	mm	450	450	450	550	550	750	
		Main Spindle						
Spindle Nose	-	As Per Our Design						
Spindle Speed Range	rpm	1500	1250	1250	1250	1250	1000	
Spindle Motor Power (Induction/Servo)	hp/kw	10/5.5	15/11	15/11	20/15	20/15	25/18.6	
		AXIS						
X-Axis Stroke	mm	250	275	275	275	275	375	
Z-Axis Stroke	mm	500	500	900	500	900	700	
Feed Drive (X & Z)	Nm	4/6	6/6	6/6	6/8	6/8	8/8	
Ball Screw Dia & Pitch (Z/X)	mm	32x10, 25x10	32x10, 25x10	32x10, 25x10	32x10, 25x10	32x10, 25x10	40X10,32X10	
		Tool Turret						
No of Station(Std.)	-	8/4	8/4	8/4	8/4	8/4	8/4	
Max. Boring Bar Diameter	mm	40	40	40	40	40	40	
Tool Size	mm	25x25	25x25	25x25	25x25	25x25	25X25	
		Tail Stock						
Quill Dia	mm	70	70	70	70	70	70	
Quill Stroke	mm	125	125	125	125	125	125	
		Accuracy						
Max. Spindle Nose Runout	mm	0.009	0.009	0.009	0.01	0.01	0.01	
Repeatability	mm	0.005	0.005	0.005	0.005	0.005	0.005	
Positioning	mm	0.025	0.025	0.025	0.025	0.025	0.025	
		Other Data						
Machine Weight(Approx)	Kg	2400	2500	2600	2700	2900	3200	
Length(Approx)	mm	2490	2490	3050	2490	2490	3050	
Width(Approx)	mm	1400	1400	1400	1400	1400	1475	
Height(Approx)	mm	1520	1520	1520	1520	1520	1520	

Ri 300A

• CNC FLAT BED TURNING MACHINE

SALIENT FEATURES

- All main Components, Bed, Headstock, Saddle, Plinth are high quality solid casting
- Precision Ball screw and rigid precision Bearing in main spindle
- Ideal for Casting & Forging
- Highest cut up to 10mm
- Automatic forced lubricant system
- Hardened and ground bed Guide ways
- Operator Friendly CNC Machine

JOB COMPONENTS

TECHNICAL SPECIFICATION

CNC DRILLING MACHINE

		Ri 500 SINGLE SPINDLE (WITH / WITHOUT) THRU COOLANT	Ri 500 DOUBLE SPINDLE (WITH / WITHOUT) THRU COOLANT	Ri 800 SINGLE SPINDLE (WITH / WITHOUT) THRU COOLANT
System		**Siemens / Fanuc**		
Capacity				
Chuck Size	mm	315	315	600
PCB Size	mm	500	±315	800
Max. Job Diameter	mm	650	650	900
Turning Height	mm	400	400	500
Max. Job Swingover Dia.	mm	700	700	1000
Spindle				
Spindle Nose	nos.	A2-5	As Per Our Design	A2-6
Spindle Speed Range	rpm	3000	1100	1250
Spindle Motor Power (Induction/Servo)	hp/kw	7.7/5	7.7/5	15/11
AXIS				
X-Axis Stroke	mm	450	120-700	600
Z-Axis Stroke	mm	400	400	500
Feed Drive (X & Z)	Nm	linear scale/8	6	linear scale/10
LM Size (Z)	mm	35	35	45
Ball Screw Dia & Pitch (Z/X)	mm	32x10/25x05	32x10/25x05	40x10/25x05
Indexing Drill Table	degree	360	360	360
Tool Turret				
Max. Drilling Size	mm	40	35	45
Max. Spindle Nose Sleeve	mm	40	40	40
Accuracy				
Max. Spindle Nose Runout	mm	0.005	0.005	0.005
Positioning	mm	0.1	0.1	0.1
Other Data				
Machine weight(Approx)	kg	3400	3400	5000
Length(Approx)	mm	1750	2100	2660
Width(Approx)	mm	1400	1400	1400
Height(Approx)	mm	2300	2300	2550

SALIENT FEATURES

- 360º Indexing Drilling Machine
- Ideal for PCD Drilling
- Rigid base and column design
- High Precision L.M. guide ways
- Siemens Controller System
- Fast Production
- Operator Friendly CNC Machine

Ri 500 TSD

• CNC DRILLING MACHINE

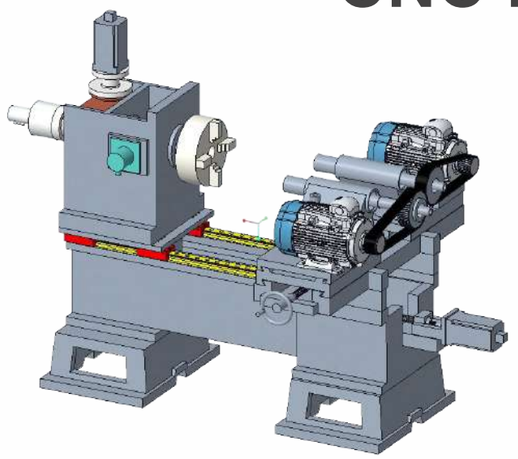

STRUCTURE

JOB COMPONENTS

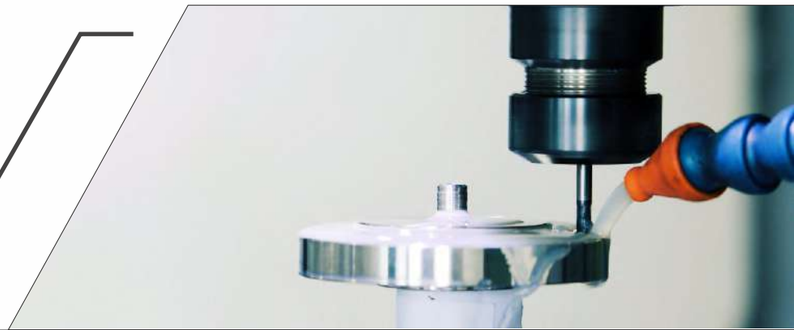

TECHNICAL SPECIFICATION

CNC SLANT BED MACHINE - 15⁰

		Ri 3050	Ri 3070	Ri 5050	Ri 5070	Ri 5080
System		**Siemens / Fanuc**				
Capacity						
Chuck Size	mm	250	250	315/400	315/400	315/400
Standard Turning Diameter	mm	300	300	500	500	500
Maximum Turning Diameter	mm	400	400	650	650	650
Maximum Turning Length	mm	500	700	500	700	800
Max. Job Swingover Dia.	mm	550	550	700	700	700
Slant Angle	degree	15	15	15	15	15
Main Spindle						
Spindle Nose	-	A2-6	A2-6	A2-8	A2-8	A2-8
Hole Through Spindle	mm	70	70	90	90	90
Spindle Speed Range	rpm	2000	2000	1500	1500	1500
Spindle Motor Power (Induction/Servo)	hp/kw	15/11	15/11	20/15	20/15	25/18.5
AXIS						
X-Axis Stroke	mm	250	250	350	350	350
Z-Axis Stroke	mm	500	700	500	700	800
Feed Drive (X & Z)	Nm	6/6	6/8	6/8	6/8	6/8
LM Size (X/Z)	mm	35/45	35/45	35/45	35/45	35/45
Ball Screw Dia & Pitch (Z/X)	mm	32X10/32X10	32X10/32X10	40x10/32x10	40x10/32x10	40x10/32x10
Tool Turret						
No of Station	-	8/4	8/4	8/4	8/4	8/4
Max. Boring Bar Diameter	mm	40	40	40	40	40
Tool Size	mm	25x25	25X25	25X25	25X25	25X25
Tail stock						
Quill Dia	mm	70	70	100	100	100
Quill Stroke	mm	125	125	125	125	125
Accuracy						
Max. Spindle Nose Runout	mm	0.003	0.003	0.005	0.005	0.005
Repeatability	mm	0.005	0.005	0.005	0.005	0.005
Positioning	mm	0.010	0.01	0.01	0.01	0.01
Other Data						
Machine Weight(Approx)	Kg	3450	4200	4325	4450	4700
Length(Approx)	mm	2555	2755	2755	2800	3100
Width(Approx)	mm	1780	1820	1820	1900	1950
Height(Approx)	mm	1625	1625	1700	1700	1715

SALIENT FEATURES

- 15º Slant Bed Structure
- High-speed Indexing and Positioning in idle time
- High rigid bed design
- Rigid Headstock & Heavy Duty Spindle
- High precision L.M. guide ways
- Tail stock with hydraulic quill
- Centralized & Programmable Lubrication
- Operator Friendly CNC Machine

Ri 3050

• CNC SLANT BED TURNING MACHINE

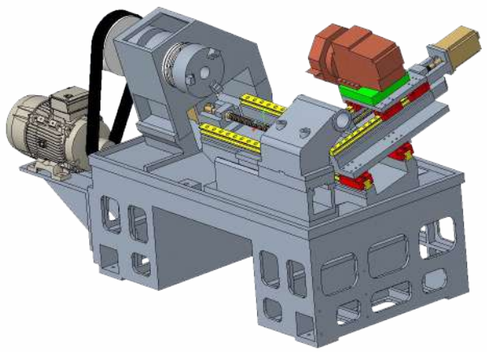

STRUCTURE

JOB COMPONENTS

TECHNICAL SPECIFICATION

CNC SLANT BED MACHINE - 30°

		Ri 1020	Ri 1520	Ri 2020	Ri 2030	Ri 2050
System		**Siemens / Fanuc**				
Capacity						
Chuck Size	mm	100	135	200	200	200
Standard Turning Diameter	mm	100	150	200	200	200
Maximum Turning Diameter	mm	200	200	250	250	250
Maximum Turning Length	mm	200	200	200	300	500
Max. Job Swingover Dia.	mm	500	500	550	550	550
Slant Angle	degree	30	30	30	30	30
Main Spindle						
Spindle Nose	-	A2-5	A2-5	A2-5	A2-5	A2-6
Hole Through Spindle	mm	50	50	50	50	70
Spindle Speed Range	rpm	4000	3000	3000	2500	2500
Spindle Motor Power (Induction/Servo)	hp/kw	7.5/5.5	7.5/5.5	10/7.5	10/7.5	15/11
AXIS						
X-Axis Stroke	mm	120	120	150	150	150
Z-Axis Stroke	mm	200	200	200	200	200
Feed Drive (X & Z)	Nm	4/4	4/4	4/4	4/4	4/6
LM Size (X/Z)	mm	25/35	25/35	25/35	25/35	25/35
Ball Screw Dia & Pitch(Z/X)	mm	32x10/25x10	32x10/25x10	32x10/32x10	32x10/32x10	32x10/32x10
Tool Turret						
No of Station	-	8/4	8/4	8/4	8/4	8/4
Max. Boring Bar Diameter	mm	40	40	40	40	40
Tool Size	mm	25x25	25x25	25x25	25x25	25x25
Tail stock						
Quill Dia	mm	70	70	70	70	70
Quill Stroke	mm	125	125	125	125	125
Accuracy						
Max. Spindle Nose Runout	mm	0.003	0.004	0.005	0.005	0.005
Repeatability	mm	0.005	0.005	0.005	0.005	0.005
Positioning	mm	0.01	0.01	0.01	0.01	0.01
Other Data						
Machine Weight(Approx)	Kg	2550	2800	3250	3400	3250
Length(Approx)	mm	1800	2100	2100	2100	2500
Width(Approx)	mm	1300	1630	1630	1630	1630
Height(Approx)	mm	1500	1600	1600	1600	1600

SALIENT FEATURES

- 30º Slant Bed Structure
- High-speed Indexing and Positioning in idle time
- High rigid bed design
- Rigid Headstock & Heavy Duty Spindle
- High Precision L.M. guide ways
- Tail stock with hydraulic quill
- Centralized & Programmable Lubrication
- Operator Friendly CNC Machine

Ri 2030

• CNC SLANT BED TURNING MACHINE

JOB COMPONENTS

LINEAR CNC MACHINE

		45° Twine Spindle Linear CNC Machine		60°Linear CNC Machine			
		Ri 100	Ri 200	Ri 1015L	Ri 2020L	Ri 2030L	Ri 3040L
System		Siemens / Fanuc					
Capacity							
Chuck Size	mm	100	200	100	200	200	250
Standard Turning Diameter	mm	200	200	100	200	200	300
Maximum Turning Diameter	mm	150	250	150	250	250	450
Maximum Turning Length	mm	220	240	150	200	200	400
Max. Job Swingover Dia.	mm	500	500	400	500	500	650
Slant Angle	degree	45	45	60	60	60	60
Main Spindle							
Spindle Nose	-	A2-5	A2-5	A2-4	A2-5	A2-5	A2-6
Hole Through Spindle	mm	50	50	20	50	50	70
Spindle Speed Range	rpm	2500	2500	3000	2500	2500	2500
Spindle Motor Power (Induction/Servo)	hp/kw	10/7.5	10/7.5	7.5/5.5	10/7.5	10/7.5	15/11
AXIS							
X-Axis Stroke	mm	570	570	± 200	± 240	± 240	680
Z-Axis Stroke	mm	240	240	150	200	200	400
Feed Drive (X & Z)	Nm	4/6	4/6	4/4	4/6	4/6	4/6
LM Size (X/Z)	mm	35/45	35/45	25/35	35X35	35X35	45/45
Ball Screw Dia & Pitch(Z/X)	mm	32x10/32x10	32x10/32x10	32x10/32x10	32x10/32x10	32x10/32x10	32x10/32x10
Tool Turret							
No of Station	-	3+3	3+3	4	4	4	3+3
Max. Boring Bar Diameter	mm	40	40	40	40	40	40
Tool Size	mm	25x25	25x25	25x25	25x25	25x25	25X25
Accuracy							
Max. Spindle Nose Runout	mm	0.005	0.005	0.004	0.004	0.004	0.005
Repeatability	mm	0.005	0.005	0.005	0.005	0.005	0.005
Positioning	mm	0.01	0.01	0.01	0.01	0.01	0.01
Other Data							
Machine Weight(Approx)	Kg	3650	3650	2350	2700	2900	3700
Length(Approx)	mm	3470	3470	1970	2050	2160	2415
Width(Approx)	mm	1610	1610	1340	1550	1550	1625
Height(Approx)	mm	1770	1770	1670	1715	1670	2100

SALIENT FEATURES

- 60º Slant Bed Structure
- Rigid Headstock & Spindle
- Qung linear tooling with table surface with T-slot
- High Precision L.M. guide ways
- Centralized & Programmable Lubrication
- Operator Friendly CNC Machine

JOB COMPONENTS

VTL MACHINE

		Ri 400 VTL	Ri 500 VTL	Ri 800 VTL	Ri 1000 VTL	RI 1250 VTL
System		Siemens / Fanuc				
Capacity						
Chuck Size	mm	315	400	530	800	1000
Standard Turning Diameter	mm	400	500	800	1000	1250
Maximum Turning Diameter	mm	550	600	900	1100	1400
Maximum Turning Length	mm	500	800	800	800	800
Max. Job Swingover Dia.	mm	600	700	1000	1200	1500
Main Spindle						
Spindle Nose	-	As Per our Design				
Spindle Speed Range	rpm	1000	600	400	400	400
Spindle Motor Power(Induction/Servo)	hp/kw	20/15	25/18.6	30/22	40/29.8	50/37.2
AXIS						
X-Axis Stroke	mm	300	375	450	550	700
Z-Axis Stroke	mm	500	800	800	800	800
Feed Drive (X & Z)	Nm	6/10	6/10	6/10	6/10	6/10
LM Size (Z)	mm	45	55	55	55	65
Ball Screw Dia & Pitch(Z/X)	mm	40x10/32x10	40x10/32x10	50x10/32x10	50x10/32x10	50x10/32x10
Tool Turret						
No of Station	-	8,linear	8,linear	8,linear	8,linear	8,linear
Max. Boring Bar Diameter	mm					
Tool Size	mm	25x25	25x25	25x25	32x32	32x32
Accuracy						
Max. Spindle Nose Runout	mm	0.005	0.005	0.005	0.005	0.005
Repeatability	mm	0.005	0.005	0.005	0.005	0.005
Positioning	mm	0.01	0.01	0.01	0.01	0.01
Other Data						
Machine Weight(Approx)	Kg	3800	4300	6150	7800	9775
Length(Approx)	mm	2100	2250	2350	2500	2725
Width(Approx)	mm	1400	1575	1625	1800	1925
Height(Approx)	mm	2300	2425	2425	2600	2825

SALIENT FEATURES

- Heavy and Rigid Single Piece Structure
- Rigid Bed and Column Structure
- High Performance Heavy Duty Spindle
- Counter balance Z-axis
- Easy accessibility for job loading from Top and Front
- Ergonomics design and improved operating features
- Centralized & Programmable Lubrication
- Operator Friendly CNC Machine

JOB COMPONENTS

We deal with a varied range of

CNC LATHE MACHINE

Radadiya Industries is one-stop solution for computerized metal cutting machines. Our products are manufactured & assembled with a customer centric approach. Our young and dynamic team of highly experienced and dedicated professionals is ready to deliver state of the art products with customized solution as customer requirement. We are leaders in wide range of CNC Turning Center, Flat Bed Turning Machine, Drilling Machine, VTL Machine. Our commitment to use advance technology to manufacture CNC Machines and ensure supreme quality of the product.

RADADIYA INDUSTRIES

Survey No. 234/1, Plot No. 5, Shitla Mataji Mandir Road,
Nr. Sahyog Cotton, Shapar (Veraval), Rajkot - 360 024, Gujarat, INDIA

+91 9033357056 / +91 9898223973

www.radadiyacnc.com / www.radadiyacnc.in

radadiya.industries@yahoo.com

Follow Us.: